GE Energy
Industrial Solutions

WORLDWIDE PARTNER

Industrial Enclosures Ed. 05

General Purpose Enclosures and LV Distribution Boards up to 4000A

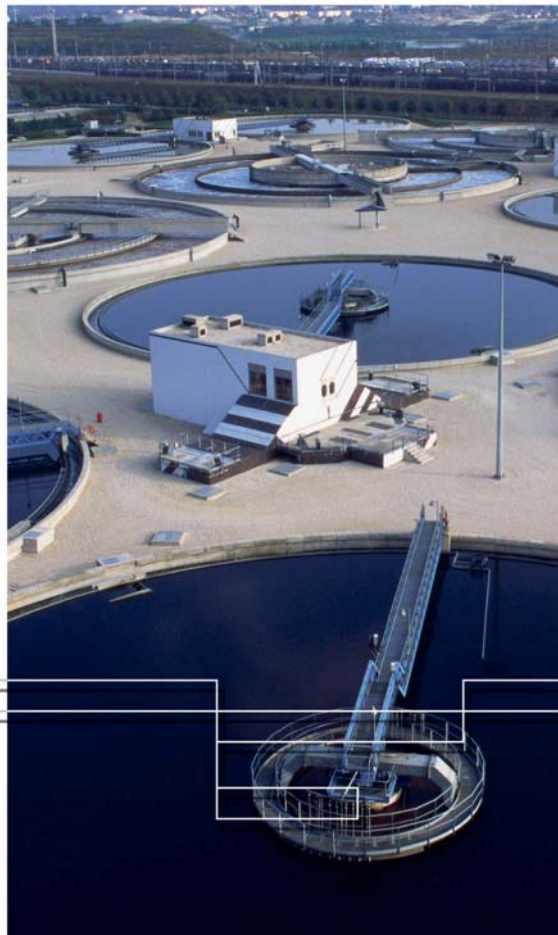

GE imagination at work

				e-Catalogue / Application guide	Intro
A.4	Flex-o-Box	A.10	MultiBox		
A.6	Series 55	A.14	MultiBox Xtra		
A.9	Lighting Pole Boxes	A.16	APO	Insulated boxes	A
B.4	MultiCab				
B.6	ARIA				
B.16	PolySafe			Insulated wall mounting cabinets	B
C.3	VMS (modular)				
C.28	Fix-o-Rail Senior			Wall mounting system enclosures	C
D.3	QuiXtra™ 630				
D.28	PowerDesign				
D.29	Modula Plus			Sheet steel distribution boards	D
E.5	EH1	E.14	EH4		
E.6	EH2	E.16	EH6		
E.8	EH3	E.18	RVS (stainless steel)	Pedestals	E
F.2	UC-Cabinet			Subterranean enclosures	F
G.2	Heating				
G.7	Ventilation			Climate control	G
				General accessories	H
I.4	Degrees of protection	I.64	Power dissipation values		
I.10	Dimensional drawings				
I.48	Specifications for tender documents			General characteristics	I
				Index	X

General Purpose Enclosures

Visit www.ge.com/ex/industrialsolutions and click on e-catalogue

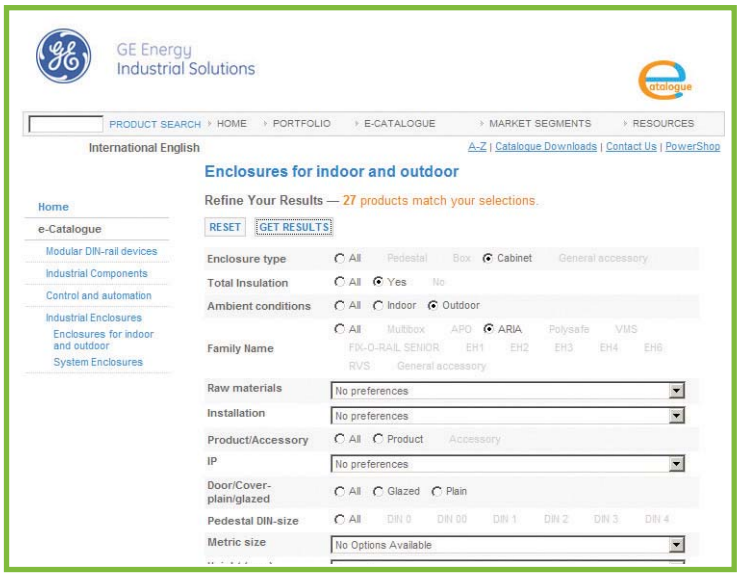

- All product info available in **one central place**
- All product info is available to **download, print or e-mail**
- Always the **latest up-to-date info**

- Use the **Quick-search** using a **part number** or **keyword**
- Find a product by using the **parametric search**, simply enter the technical characteristics you are looking for
- **Compare** up to 4 products and view the technical data and accessories on a single page
- **High resolution images** are available by clicking on the small product image
- Product pages contain all available data: **technical specifications, dimensional drawings, product descriptions**, ...
- The data also displays the **available functions and accessories** for each product

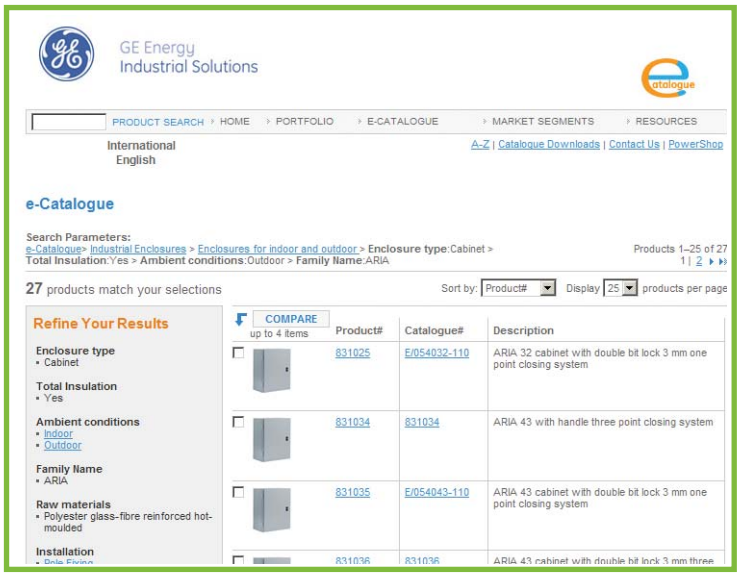

High resolution images available

Housings for all kind of applications

Industry

Shipyards, mining, automotive, paper & pulp, food and beverage, petro-chemicals, heavy industry, transformers, system monitoring, ...

Commercial

Leisure (market places, camping sites, harbours for pleasure craft, amusement parks,...), fuel stations, car washes, launderettes and laundries, service enclosures for construction yards, ...

Utilities

Energy distribution (electricity, gas, water), cable TV, telecommunication, photovoltaic cells, solar energy, ...

Public services

Public transport, public lighting, railways, water treatment plants, waste management, ...

MultiBox

Small multipurpose boxes

Wide range of small to medium size multipurpose boxes for indoor and protected outdoor applications.

- Automation and control applications in industry, machinery, toolshop and OEM.
- Electronic applications in data and telecom industry.
- As commercial and industrial power distribution boxes.

All boxes are made from polystyrene or glass-fibre reinforced polycarbonate, offering a high protection degree of IP66 with mechanical impact strength of IK07 for polystyrene and IK08 for polycarbonate.

MultiBox enclosures can be easily modified and/or customized (coloured, printed, with cut-outs...).

Overview of the range ● Page A.3
Product information ● Page A.10
Dimensional drawings ● Page I.12
Specifications for tender documents ● Page I.48
Power dissipation values ● Page I.65

MultiBox Xtra

Medium sized multipurpose boxes

Range of medium to large size multipurpose boxes for indoor and protected outdoor installation.
- Automation and control application in machine and plant construction, general industry and OEM.
- Electronic applications in data and telecom industry.
- Commercial and industrial power distribution boxes.

Enclosures are made out of ABS or Polycarbonate and achieve high ingress protection rating of IP66/67 and a mechanical impact strength of IK08.

Enclosures are equipped with a cover to be opened by means of a quick-lock (180 degree opening). Large, smooth and robust sidewalls allow direct cable entry for individual configurations.

MultiBox Xtra enclosures can be easily modified and/or customized.

Overview of the range ● Page A.3
Product information ● Page A.14
Dimensional drawings ● Page I.14
Specifications for tender documents ● Page I.49

APO

Modular polyester boxes

Range of nine medium sized, modular, multipurpose boxes for in- and outdoor applications.

- Automation and control applications in oil and steel industry, petrochemical plants, breweries.
- Applications in utilities such as public lighting, traffic control, signalisation.
- For installation in aggressive environments such as ship-yards, offshore oil production platforms, mining sites.

All boxes are made of hot moulded, glass-fibre reinforced polyester, offering a high protection degree of IP67 with a mechanical impact strength of IK10.

APO-boxes can be readily worked with conventional tools such as drills, cutting mills, saws, punches, etc.

Overview of the range ● Page A.3
Product information ● Page A.16
Dimensional drawings ● Page I.16
Specifications for tender documents ● Page I.50
Power dissipation values ● Page I.66

MultiCab

Medium sized multipurpose cabinets

Range of medium to large size multipurpose cabinets for indoor and protected outdoor applications.
- Automation and control application in machine and plant construction, general industry and OEM.
- Electronic applications in data and telecom industry.
- Commercial and industrial power distribution cabinets.

Enclosures are made out of ABS or Polycarbonate and achieve high ingress protection rating of IP65 and a mechanical impact strength of IK08.

Enclosures are equipped with a cover to be opened by means of a quick-lock (latch or double-bit) mounted at the side. This allows a large cover surface for printings, display, switches without disturbing locking elements. Large, smooth and robust sidewalls allow direct cable entry for individual configurations.

MultiCab enclosures can be easily modified and/or cus-tomized.

Overview of the range ● blz. B.3
Product information ● blz. B.4
Dimensional drawings ● blz. I.15
Specifications for tender documents ● blz. I.51

ARIA

Universal polyester cabinets

Range of seven universal multipurpose cabinets for in- and outdoor applications. Ideal for high performance applications in

- Heavy industry (pulp & paper mills, mining sites, wood & lumber production, steel mills,...).
- Petroleum refineries, chemical and petrochemical plants.
- Temporary connection (for construction yards, camping sites, harbours for pleasure crafts, market places, fairs, ...).
- Alimentation industry and breweries.
- Waste water treatment, public lighting, traffic control, signalisation.
- For installation in aggressive environments such as shipyards, offshore oil production platforms, mining sites.

All cabinets are made of hot moulded, glass-fibre reinforced polyester, offering a high protection degree of IP66 with a mechanical impact strength of IK10 (IK07 for cabinets with glazed door).

Overview of the range ● Page B.3
Product information ● Page B.6
Dimensional drawings ● Page I.20
Specifications for tender documents ● Page I.52
Power dissipation values ● Page I.68

PolySafe

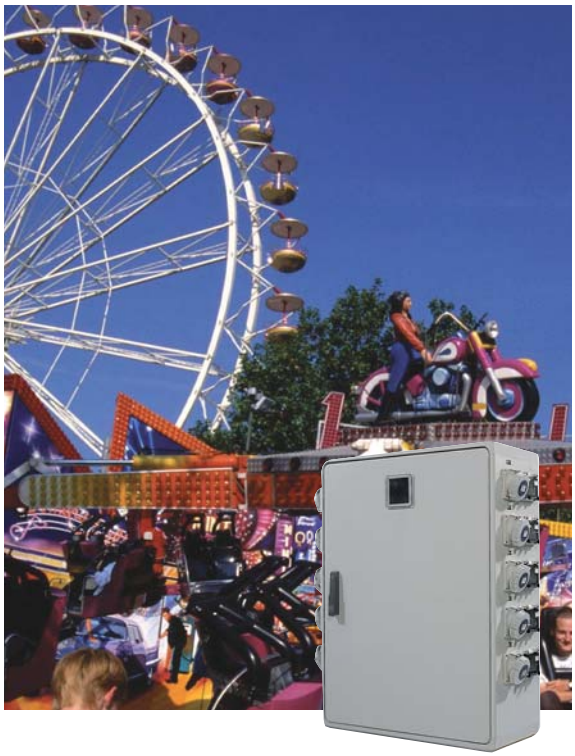

Multipurpose polyester cabinets

Range of fourteen multipurpose, factory assembled cabinets in one depth 320 mm, for in- and outdoor stationary use. Applications in

- Commercial: leisure (market places, camping sites, harbours for pleasure crafts, amusement parks), fuel stations, car washes, launderettes and laundries, service enclosures for construction yards, ...
- Industrial: shipyards, mining, automotive, paper & pulp, food and beverage, petrochemicals, transformers, system monitoring, ...
- Utilities: waste water treatment, waste management, telecommunications, traffic signalisation, traffic control, public transport, energy distribution (electricity, gas, water), cable television (CATV), public lighting, railways, ...

All cabinets are made of self-extinguishing, hot moulded, glass-fibre reinforced polyester, offering a high protection degree of IP65 with a mechanical impact strength of IK10 (IP55-IK07 for cabinets with glazed door).

Overview of the range ● Page B.3
Product information ● Page B.16
Dimensional drawings ● Page I.22
Specifications for tender documents ● Page I.53
Power dissipation values ● Page I.70

VMS

Modular enclosures system

Range of five modular boxes based on a 100mm module. Rapid assembly of any configuration of units without the need for tools. For indoor application.

- Industry
- Public utilities
- Motor control centers
- Electronic instrumentation
- Low voltage distribution boards

The boxes are made of glass-fibre reinforced polycarbonate. Covers are made of either transparent or opaque polycarbonate. VMS boxes provide a high protection degree of IP65 and a mechanical impact strength of IK08 for the bases and end-plates and IK10 for the covers.

Overview of the range ● Page C.2
Product information ● Page C.3
Dimensional drawings ● Page I.24
Specifications for tender documents ● Page I.54
Power dissipation values ● Page I.72

Fix-o-Rail Senior

Type tested distribution enclosure according to EN 60439-1

Type tested energy distribution enclosure conforms to EN 60439-1.

KEMA and CEBEC approved.

The application of the range is ideal for the installation of electrical energy distribution in domestic and commercial markets.

A range of 5 standard enclosures equipped with a removable DIN rail frame and polyester cover plates offers maximum protection thanks to the total insulation.

Easy wiring, due to the flexible cable entry plates on top and bottom.

Cabinets are available as standard with protection degree IP41 and have high mechanical impact of IK08.

Overview of the range ● Page C.2
Product information ● Page C.28
Dimensional drawings ● Page I.28
Specifications for tender documents ● Page I.55
Power dissipation values ● Page I.73

QuiXtra™ 630

Type tested distribution boards up to 630A according to EN 60439-1

Type tested energy distribution enclosure conforms to EN 60439-1. KEMA approved.

Manufactured in sheet steel and delivered in flat pack format, to be assembled by the PB/Installer.

Designed for 630A - 415/690V 40/60Hz - 30kA/1s eff.

The application of the range makes it ideal for installation in electrical distribution systems in commercial and industrial markets segments.

A range of 24 enclosures, in wall mounting or floor standing versions, equipped with a various range of functional units based on modules of 50 mm, offering maximum possibilities to the installer and panel builder.

Easy wiring, due to the direct mounting of the functional units on the rear panel, used as mounting plate. Several features designed to reduce the total labor time to configure, assembly and wire the distribution panel.

Cabinets are available as standard with protection degree IP40, upgradable up to IP43 and a high mechanical impact of IK09 / IK08.

Overview of the range ● Page D.11
Product information ● Page D.2
Dimensional drawings ● Page I.29
Specifications for tender documents ● Page I.56
Power dissipation values ● Page I.74

Modula Plus

Type tested distribution boards up to 4000A according to IEC 60439-1

LOVAG approved.

System enclosure for distribution boards up to 4000A in industrial and commercial market segments.

Manufactured in sheet steel and deliver in flat pack format.

Distribution board up to 4000A, and Icw = 70kA/1s.

The Rated operational voltage (Ue) is 690V, the rated isolation voltage (Ui) is 1000V and the rated frequency is 50/60 Hz.

Protection Class I, protection against indirect contacts by earthing.
Protection against water and dust IP55 with doors and IP30 without doors.

Product information ● Page D.29
Dimensional drawings ● Page I.30
Specifications for tender documents ● Page I.57
Power dissipation values ● Page I.78

EH1, EH2, EH3, EH4, EH6

Non-metallic pedestals

Wide range of DIN-size and non DIN-size pedestals for outdoor application like
- power distribution
- traffic signalling and public lighting
- telecommunication, electronics or cable TV
- waste water treatment
- camping sites and market places

Pedestals are delivered with integrated bases (for non DIN-sizes) or to be mounted on a standard DIN base.

All enclosures are made from hot moulded, glass fibre reinforced polyester and offer protection degree from IP23 up to IP54 and are idealy suited for outdoor installation.

Overview of the range ● Page E.2
Product information ● Page E.4
Dimensional drawings ● Page I.32
Specifications for tender documents ● Page I.58
Power dissipation values ● Page I.82

RVS

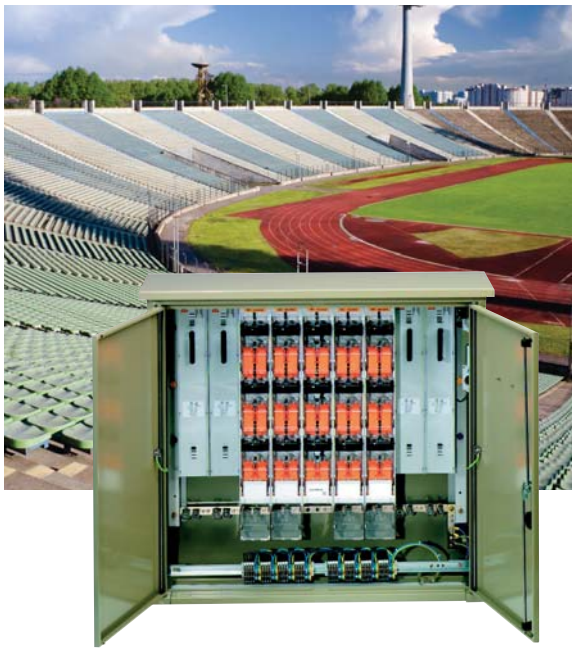

Stainless steel pedestals

A wide range of stainless steel RVS pedestals for outdoor use complies with the standard EN/IEC 60439-5.

The RVS stainless steel pedestals make it possible to offer professional above ground solutions for cable networks, telecommunications, recreation grounds and other general applications.

In stainless steel AISI 304, painted in a polyester coating RAL 7034.

A range from DIN 00 up to DIN 4 in the width and deliverable in 5 different heights and one depth of 355 mm.

The cabinets have partially sunken bases in stainless steel or in concrete.

The pedestals offers maximum protection to the user and equipment thanks to the protection degree IP43 – IK10 according the IEC 60529, EN 60529 and EN/IEC 62262.

Overview of the range ● Page E.3
Product information ● Page E.18
Dimensional drawings ● Page I.42
Specifications for tender documents ● Page I.62
Power dissipation values ● Page I.84

UC-Cabinet

Subterranean enclosures

Stainless steel enclosures with concrete foundation used in underground applications and suitable for installing all kinds of equipment for temporary connectivity.

In concrete and stainless steel AISI 304.

They can remain underground both in active and passive condition.

They avoid obstacles at street level and are vandalism approved.

The enclosure offers maximum protection to the user and equipment due to the high protection degree of the diving bell principle and the very strong structure and cover according the IEC 60529, EN 124 and EN 1.4452

Used on markets, fairs and other events, but they are also suitable for data connections for IT related applications.

Product information ● Page F.2
Dimensional drawings ● Page I.44
Specifications for tender documents ● Page I.63

A.4 **Flex-o-Box** - Junction boxes IP65
A.6 **Series 55** - Junction boxes IP66
A.9 **Lighting pole boxes**
A.10 **MultiBox** - Small multipurpose boxes
A.14 **MultiBox Xtra** - Medium sized multipurpose boxes
A.16 **APO** - Modular polyester boxes

Overview Insulated Boxes

Flex-o-Box IP65	Series 55 - IP66
90.5 x 90.5 x 49	125 x 125 x 75
110 x 110 x 49	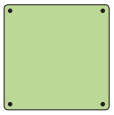 175 x 175 x 95
	225 x 175 x 95

H x W x D in mm

Overview Insulated Boxes

MultiBox IP66	MultiBox Xtra IP66/IP67	APO IP67
65 x 65 x 57/81	300 x 200 x 170	186 x 151 x 140
94 x 65 x 57/81	300 x 300 x 170	302 x 186 x 175
94 x 94 x 57/81	400 x 300 x 170/230	302 x 302 x 175
110 x 110 x 66/90	400 x 400 x 170	372 x 302 x 175
130 x 94 x 57/81	600 x 300 x 170	488 x 302 x 175
130 x 130 x 75/99	600 x 400 x 210/270	558 x 302 x 175
180 x 94 x 57/81		603 x 302 x 175
180 x 110 x 90/111/165		603 x 372 x 175
182 x 180 x 90/111/165		603 x 603 x 175
254 x 180 x 90/111/165		
361 x 254 x 111/165		

H x W x D in mm

Junction boxes

IP65

Metric entries from end 2011 on

Approvals / Marking

Features

Flex-o-Box Junior

Technical data
- Suitable for surface mounting
- 2.5 mm^2 - 500V
- IP65 protection degree
- Standards and approvals
  CEBEC: NBN C 68-685-2-0
  NBN C68-685-1
  KEMA: EN/IEC 670
- Colour: RAL 7035
- Material: resists the 650°C incandescent wire test
- Halogen-free
- Operating temperature: -5°C to +60°C
- Total insulation: ⧈

Eight flexible entries
- 7 x Ø 20 in the side wall
- 1 x Ø 20 in the back
- Suitable for cable max. Ø 20
- Suitable for tubes 5/8" and 3/4"

Flex-o-Box JB^6

Technical data
- Suitable for surface mounting
- 6 mm^2 - 500V
- IP65 protection degree
- Standards and approvals:
  CEBEC: NBN C68-685-2-0
  NBN C68-685-1
  KEMA: EN/IEC 670
- Colour: RAL 7035
- Material: resists the 650°C incandescent wire test
- Halogen-free
- Operating temperature: -5°C to +60°C
- Total insulation: ⧈

Nine flexible entries
- 7 x M20 in the side wall
- 2 x Ø 20 mm max. entries in the back of the base
- Suitable for cable max. Ø 20
- Suitable for tubes 5/8" and 3/4"
- Suitable for cable seals (8 mm min. thread length)

Dimensional drawings ● Page I.10

Flex-o-Box

		Ref. No.	Pack.
Junior	Junction box 2.5 mm²	600656	10/100
	Junction box 2.5 mm² (34 pieces in a red polybox basket)	600314	1
JB⁶	Junction box 6 mm²	600651	10/100
	Junction box 6 mm² (24 pieces in a grey polybox basket)	600310	1

Accessories

for Junior and JB⁶

Terminal block

600950	30

6 mm² - 500V - pin-type

5-terminal blocks

Possible connections per terminal:

6 x 1.5 mm² 2 x 6 mm²

4 x 2.5 mm² 2 x 10 mm²

3 x 4 mm²

Terminal strip

600650	20/200

6 mm² - 500V - hole-type

5-terminal strips

Possible connections per terminal:

6 x 1.5 mm² 3 x 4 mm²

4 x 2.5 mm² 2 x 6 mm²

only for JB⁶

Cable seal

851046	50

PG16 grey

851652	50

M20, polyamid, grey

Entry socket for tube

600933	25/300

PG16 for tube 5/8" grey

600934	25/300

PG16 for tube 3/4" grey

for tube ø 16 mm

for tube ø 20 mm

600346	25

M20 grey

for tube ø 16 mm

for tube ø 20 mm

Insulated cap

600945	25

PG16 grey

851674	100

M20, polyamid, grey

Screws

For cover fastening

600652	40

Stainless steel

Junction boxes *IP66*

Approval

CEBEC

Applications

- As an empty box
- As a junction box (10/16/25 mm^2)
- Coupled

Features

- Standard: EN/IEC 529
- Material: thermoplastic high impact polyphenylene oxyde
- Total insulation: ⧈
- IP66 protection degree

Dimensions

Three sizes - three types
55100 - 125 x 125 x 75 mm
55200 - 175 x 175 x 95 mm
55300 - 225 x 175 x 95 mm

Dimensional drawings ● Page I.10

Benefits

The cable entries are selective knockouts placed as close as possible to the wall.

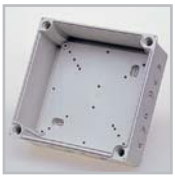

Oval openings in the base allow levelling. Four fixing holes outside the gasket and two fixing holes inside the box.

The raised bottom avoids obstruction while cabling and bending of the cables.

Raised supports for the placement of the mounting plate.

The screws are thermoplastic, captive, full turn, with a big pitch and placed outside the gasket.

All the boxes are sealable.

Series 55100 - 10 mm^2

IP66 - IK07

	Cover	Entries	Characteristics	Ref. No.	Pack.
	grey	5 x PG 16/21	Empty. Can be equipped with terminal blocks 600516	**600514**	16
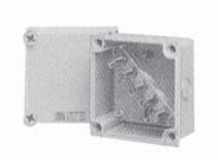	grey	5 x PG 16/21	Equipped with terminal blocks 600516: 5 clamps with maximum capacity: 5 x 4 mm^2 / 4 x 6 mm^2 / 3 x 10 mm^2	**600515**	16

Series 55200 - 16 mm^2

IP66 - IK07

	Cover	Entries	Characteristics	Ref. No.	Pack.
	grey	6 x PG 16/21 5 x PG 21/29	Empty. Can be equipped with terminal blocks 600525 600526 (x5) 600544 (x5) 600545 (x5) 600516	**600517**	9
	grey	6 x PG 16/21 5 x PG 21/29	Equipped with terminal blocks 600525: 5 clamps with maximum capacity: 5 x 6 mm^2 / 4 x 10 mm^2 / 3 x 16 mm^2	**600524**	9
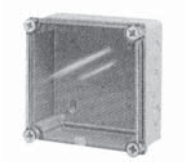	transparent	6 x PG 16/21 5 x PG 21/29	Empty	**600523**	9

Series 55300 - 25 mm^2

IP66 - IK07

	Cover	Entries	Characteristics	Ref. No.	Pack.
	grey	8 x PG 21 6 x PG 21/29	Empty. Can be equipped with terminal blocks 600544 (x5) 600545 (x5) 600525 600526 (x5)	**600532**	1
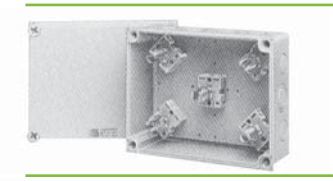	grey	8 x PG 21 6 x PG 21/29	Equipped with terminal blocks 600544 (x5): 5 clamps/nuts with maximum capacity: 4 x 16 mm^2 / 3 x 25 mm^2 / 2 x 35 mm^2	**600543**	9
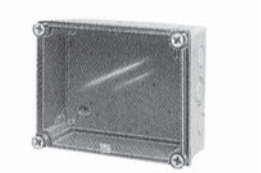	transparent	8 x PG 21 6 x PG 21/29	Empty	**600539**	9

Accessories

Terminal blocks 500V 10 mm²

600516	6

Set terminal blocks with two fixation screws. With five clamps suitable for Al or Cu connection.
Maximum cable section per clamp:
5 x 4 mm² / 5 x 4 mm² / 5 x 4 mm².
Can be fitted in types 55100 and 55200.

Couplings

600509	1

Set of two pieces
PG21
It is possible to combine types
55200 and 55300

Terminal blocks 500V 16 mm²

600525	6

With five clamps, suitable for Al or Cu connection.
Maximum cable section per clamp:
5 x 6 mm² / 4 x 10 mm² / 3 x 16 mm².
Can be fitted in types 55200 and 55300.

Compression glands

600504	25

PG21 with nut in glass fibre reinforced polyamide. Grey.

600505	25

PG29 with nut in glass fibre reinforced polyamide. Grey.

Terminal blocks 500V 16 mm²

600526	24

With one clamp/nut (with nut), suitable for Al or Cu connection.
Maximum cable section per clamp:
5 x 6 mm² / 4 x 10 mm² / 3 x 16 mm².
Can be fitted in types 55200 and 55300.

Compression glands

600501	25

PG21 polyamide with nut in glass fibre reinforced polyamide. Brown.

600502	25

PG29 polyamide with nut in glass fibre reinforced polyamide. Brown.

Terminal blocks 500V 25 mm²

600544	24

With one clamp/nut (with nut), suitable for Al or Cu connection.
Maximum cable section per clamp:
4 x 16 mm² / 3 x 25 mm² / 2 x 35 mm².
Can be fitted in types 55200 and 55300.

Locknuts

600506	100

Nut in glass fibre reinforced polyamide to connect compression glands PG21. Grey.

600507	50

Nut in glass fibre reinforced polyamide to connect compression glands PG29.
Grey.

Terminal blocks 500V 25 mm²

600545	24

With one clamp/nut (double nut), suitable for Al or Cu connection.
Maximum cable section per clamp:
4 x 16 mm² / 3 x 25 mm² / 2 x 35 mm².
Can be fitted in types 55200 and 55300.

Universal entries (grey)

610130	25

Cable max. 18 mm, drill 23 mm, PG16

610132	25

Cable max. 24 mm, drill 29 mm, PG21

610133	25

Cable max. 32 mm, drill 38 mm, PG29.

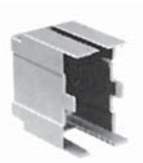

Insulated cap

890838	48

Suitable for terminal blocks
600526
600544
600545

Street lighting pole boxes

- Base and cover in fiberglass reinforced polyester (types A, B and E).
- Base and cover in fiberglass reinforced thermoplast (type D).
- Constructed for mounting in lighting poles or on facades.
- Total insulation IP44 - IK09

Junction boxes

	Description	Equipment	Ref. no.	Pack.
Type A	- Cover with 4 screws M4. - Entries • Top: 2 threaded PG16 equipped with universal cable entries (851084) and compression bushes (851047) • Bottom: 2 threaded PG21 of which 1 equipped with an universal entry (610132)	Includes: • 2 pin fuseholders 20A (619012) • 1 support with 4 terminals 16 mm² (779214) with insulated hood in rubber (890704)	**890701**	1
		Includes: • 3 pin fuseholders 20A (619012) • 1 terminal with 4 terminals 16 mm² (779214) with insulated hood in rubber (890704)	**890700**	1
Type B	- Cover with 1 triangular screw (TTR) and sealable. - Entries Bottom: 2 universal PG11 (851082)	Includes: • 2 pin fuseholders 20A (619012) • 1 support with 4 terminals 16 mm² (779212 without earth connector) with insulated hood in rubber (890704)	**890706**	1
Type D	- Cover with 2 triangular screws (TTR) - Entries • Top: 1 knock-out with a supplied nut H20 • Bottom: 5 of which 3 knock-outs - 3 for Al protection tube Ø 28 mm or - 3 EXVB4G 10 mm² or 3 EVAUB4G 10 mm² - 1 VOB st 16 mm² - 1 XVB3G 1.5 mm² or XVB3G 2.5 mm² - non used entries can be sealed from the inside by a supplied blanking plug	Includes • 3 disconnectors for cylindrical fuses SF321 • 1 support with 4 terminals 16 mm², each one with 2 compression units and 1 insulated hood in rubber	**890761**	1
Type E	- Cover with 1 triangular screw 8 mm - Entries: all with knock-out possibility • Top: 3 knock-outs for cable glands M20 or M25 • Bottom: 6 knock-outs - 3 for cable glands M20 - 2 for earth cable Ø 8 mm - 1 for cable Ø 11 mm	Empty unit	**890728**	1
		Box with • 4 clamp terminals 35 mm² each with 2 connection points and 1 isolating cap	**890729**	1

Accessories

Key for type B		
	851016	30
Triangular key (TTR)		

Key for types D and E		
	832027	1
Triangular key 8 mm		

Dimensional drawings ● Page I.11

Small multipurpose boxes

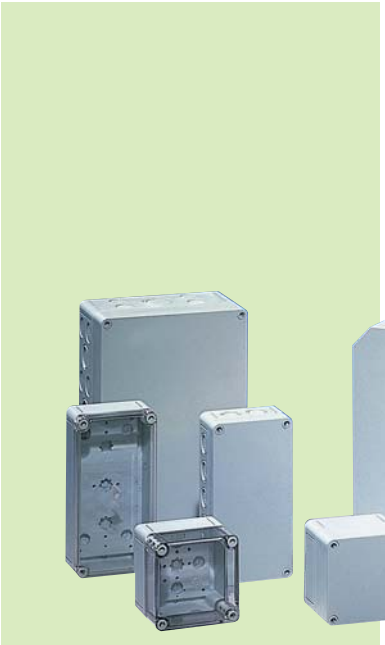

Applications

- Ideal for automation and control applications in industry, machinery, tool-shop and OEM.
- Electronic applications in data and telecom industry.
- Also suitable for use as commercial and industrial distribution boxes.

Standards

IEC 60529 EN 60529
IEC 62208 EN 62208
IEC 62262 EN 62262
DIN VDE 0606 Teil 1/11.84

Approvals

Only for polycarbonate boxes, available on request

Overview of the range ● Page A.3
Dimensional drawings ● Page I.12
Specifications for tender documents ● Page I.48
Power dissipation values ● Page I.65

Features and benefits

- 11 different basic enclosures (from 65 x 65 mm up to 361 x 254 mm) with up to 3 different cover depths.
- Material: made of polystyrene or glass-fibre reinforced polycarbonate.
- Colour: Grey RAL 7035
- High protection degree, IP66-IK07 for polystyrene, and IP66-IK08 for polycarbonate, by means of injected polyurethane seal.
- Polycarbonate boxes are available with smooth side walls (only one entry) or with several metric knock-outs.
  Polystyrene boxes are available with smooth side walls or with several metric knock-outs.
- Opaque grey or transparent covers.
- Designed for surface mounting.
- Combinations of heights and widths optional.
- Polystyrene boxes (650° glow wire test) are suitable for use in temperatures up to +70°C, polycarbonate boxes (960° glow wire test) are suitable for use in temperatures up to +120°C.
- Total insulation ⧈
- High resistance to chemical and aggressive influences.
- Halogen-free.
- Self-extinguishing (UL94-V2).
- Rated insulation voltage Ui = 1000V

Why MultiBox

Do you prefer something standard or can it be tailor-made?

GE offers you: customerspecific developments for all your applications and requirements, exclusively to meet your needs!

- All colours (environmental aspects, customised, differentiated)
- Painted or screened
- With cut-outs (circular, rectangular, square)
- Coupling facilities in vertical and horizontal direction
- EMC shielded

Small multipurpose boxes

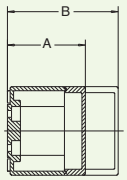

(for terminals)

(for terminals and components)

Base	Depth	Polystyrene: Grey Cover RAL 7035 Ref. No.	Polystyrene: Transparent Cover Ref. No.	Polycarbonate (*): Grey Cover RAL 7035 Ref. No.	Polycarbonate (*): Transparent Cover Ref. No.	Mounting plate (Insulated) Ref. No.	DIN profile 15x5x1 Ref. No.	DIN profile 35x7,5x1 Ref. No.
		MB 11 H x W = 65 x 65 mm				45 x 45 mm	L=49,5 long/short side	
With metric knock-outs	A = 57	861612	861613	861500	861501	861730	861741	-
	B = 81	861614	861615	861502	861503			
Smooth	A = 57	861668	861669	861556	861557			
	B = 81	861670	861671	861558	861559			
		MB 21 H x W = 94 x 65 mm				74 x 45 mm	L=49,5 short side	
With metric knock-outs	A = 57	861616	861617	861504	861505	861731	861741	-
	B = 81	861618	861619	861506	861507			
							L=80 long side	
Smooth	A = 57	861672	861673	861560	861561		861742	-
	B = 81	861674	861675	861562	861563			
		MB 22 H x W = 94 x 94 mm				74 x 74 mm	L=80 long/short side	
With metric knock-outs	A = 57	861620	861621	861508	861509	861732	861742	-
	B = 81	861622	861623	861510	861511			
Smooth	A = 57	861676	861677	861564	861565			
	B = 81	861678	861679	861566	861567			
		MB 33 H x W = 110 x 110 mm				90 x 90 mm	L=92 long/short side	L=81 long/short side
With metric knock-outs	A = 66	861624	861625	861512	861513	861733	861743	861746
	B = 90	861626	861627	861514	861515			
Smooth	A = 66	861680	861681	861568	861569			
	B = 90	861682	861683	861570	861571			
		MB 42 H x W = 130 x 94 mm				110 x 74 mm	L=111 long side	L=106 long side
With metric knock-outs	A = 57	861628	861629	861516	861517	861734	861744	861747
	B = 81	861630	861631	861518	861519			
Smooth	A = 57	861684	861685	861572	861573			
	B = 81	861686	861687	861574	861575			
		MB 44 H x W = 130 x 130 mm				110 x 110 mm	L=111 long/short side	L=106 long/short side
With metric knock-outs	A = 75	861632	861633	861520	861521	861735	861744	861747
	B = 99	861634	861635	861522	861523			
Smooth	A = 75	861688	861689	861576	861577			
	B = 99	861690	861691	861578	861579			
		MB 52 H x W = 180 x 94 mm				160 x 74 mm	L=154 long side	L=144 long side
With metric knock-outs	A = 57	861636	861637	861524	861525	861736	861745	861748
	B = 81	861638	861639	861526	861527			
Smooth	A = 57	861692	861693	861580	861581			
	B = 81	861694	861695	861582	861583			

(*) Smooth = one metric knock-out on short side for power supply cord ! (See dimensional drawings on I.12)

Pack. = 1

Small multipurpose boxes

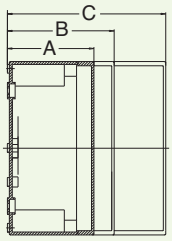

(for terminals and components)

Base	Depth	Polystyrene: Grey Cover RAL 7035 Ref. No.	Polystyrene: Transparent Cover Ref. No.	Polycarbonate (*): Grey Cover RAL 7035 Ref. No.	Polycarbonate (*): Transparent Cover Ref. No.	Mounting plate (Insulated) Ref. No.	DIN profile 35x7,5x1 Ref. No.
		MB 53 H x W = 180 x 110 mm				150 x 90 mm	L=144 long side
With metric knock-outs	A = 90	861640	861641	861528	861529	861737	861748
	B = 111	861642	861643	861530	861531		
	C = 165	861644	861645	861532	861533		
Smooth	A = 90	861696	861697	861584	861585		
	B = 111	861698	861699	861586	861587		
	C = 165	861700	861701	861588	861589		
		MB 65 H x W = 182 x 180 mm				150 x 150 mm	L=144 long side
With metric knock-outs	A = 90	861646	861647	861534	861535	861738	861748
	B = 111	861648	861649	861536	861537		
	C = 165	861650	861651	861538	861539		
Smooth	A = 90	861702	861703	861590	861591		
	B = 111	861704	861705	861592	861593		
	C = 165	861706	861707	861594	861595		
		MB 75 H x W = 254 x 180 mm				220 x 150 mm	L=216 long side
With metric knock-outs	A = 90	861654	861655	861542	861543	861739	861749
	B = 111	861656	861657	861544	861545		
	C = 165	861658	861659	861546	861547		
Smooth	A = 90	861710	861711	861598	861599		
	B = 111	861712	861713	861600	861601		
	C = 165	861714	861715	861602	861603		
		MB 87 H x W = 361 x 254 mm				331 x 220 mm	L=336 long side
With metric knock-outs	A = 111	861662	861663	861550	861551	861740	861750
	B = 165	861664	861665	861552	861553		
Smooth	A = 111	861718	861719	861606	861607		
	B = 165	861720	861721	861608	861609		

(*) Smooth = one metric knock-out on short side for power supply cord ! (See dimensional drawings on I.12)

Pack. = 1

MultiBox Matrix

MB (MultiBox)	Height	Width
11	65	65
21	94	65
22	94	94
33	110	110
42	130	94
44	130	130
52	180	94
53	180	110
65	182	180
75	254	180
87	361	254

Accessories

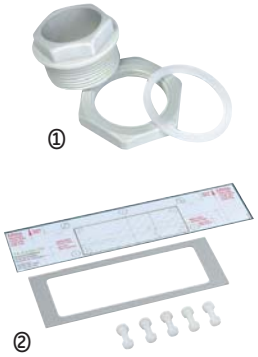

Combi set

For joining several boxes horizontal and/ or vertical

①	861753	5
	small M20	
①	861754	5
	small M25	
①	861755	5
	small M32	
②	861756	1
	large from MB 53 on	

Hinges

Converts removable covers into hinged covers. (incl. drilling template)

861757	1
Small up to MB 52	
861758	1
Large from MB 53 on	

Wall mounting brackets

861759	1
For external mounting of all MultiBoxes	
1 set = 4 pieces	

Padlock

861761	1
For protection against unauthorised access.	
Available from MB 65 on	

Spacers

861762	1
In plastic (6 + 8 mm), determines the distance between PC-boards or mounting plates and the base of the box	
1 set = 8 pieces (incl. fixing screws)	
Available for all MultiBoxes.	

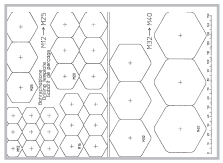

Drilling template

861760	5
Aids drilling, setting the required min. spacing, maximum number of holes and box positioning.	

Thumb grip

861763	1
For fixing on to cover screws.	
Available for all MultiBoxes - 1 set = 4 pcs	

Carrying handle

Used with MultiBoxes for portable purposes (plastic, green).

861764	1
with plastic screws	
861765	1
with self-tapping screws	

Double membrane nipple IP66

Special plastic material (elastic and temperature-resistant)

Secure fitting without locknut, two integrated sealing membranes.

Cable glands, see p. I.2

861724	50
M16	
861725	50
M20	
861726	50
M25	
861727	25
M32	

Air vent (IPx4)

To allow ventilation and prevent condensation. Air vents are preferably mounted in the upper and lower part of the box - M20

861728	25

Coverscrews

861769	20
Short for grey cover, enclosure depth A	
861770	20
Long for grey cover, enclosure dept B & C	

Medium sized multipurpose boxes

Xtra large smooth side wall
ideal for maximum cable entry flexibility

Xtra strong side wall
ideal for direct threading

Xtra quick-lock screw
180 degree turn only

Standard

IEC 62208

Approvals

Documents available on request

Features and benefits

- 6 basic dimensions from 300x200 up to 600x400 mm.
- In 4 different depths: 170-210-230-270 mm.
- 23 different boxes in total!
- Made out of strong and reliable polycarbonate or ABS.
- Very high surface finish quality.
- High protection degree IP66/IP67 - IK08
- Grey and transparent cover versions.
- Smooth side walls.
- Many fixation possibilities in the base for mounting plate, DIN-rails, etc. by means of self-tapping screws.
- Quick-locking cover screws - 180° turn only.
- Whole cover is transparent, full visibility on built-in components.
- Wide rectangular front opening in base, no edge re-inforcements.
- Sturdy base, material thickness sufficient for direct cable gland threading.
- Customisation possibilities i.e. cut-outs.

Applications

- Automation and control applications
- Electronic application in data and telecom
- Commercial and industrial distribution boxes

Overview of the range ● Page A.3
Dimensional drawings ● Page I.14
Specifications for tender documents ● Page I.49

New

Medium sized multipurpose boxes

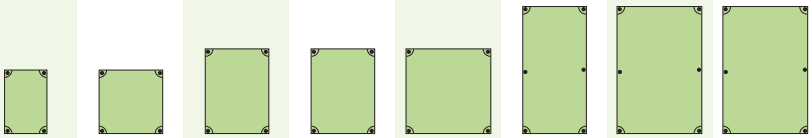

	Type	MBX 32	MBX 33	MBX 431	MBX 432	MBX 44	MBX 63	MBX 641	MBX 642
	H	300	300	400	400	400	600	600	600
	W	200	300	300	300	400	300	400	400
	D	170	170	170	230	170	170	210	270
Polycarbonate, grey cover	**Ref. no.**	**861775**	**861776**	**861777**	**861778**	**861779**	**861780**	**861781**	**861782**
Polycarbonate, transparent cover	**Ref. no.**	**861783**	**861784**	**861785**	**861786**	**861787**	**861788**	**861789**	**861790**
ABS, grey cover	**Ref. no.**	**861791**	**861792**	**861793**	**861794**	**861795**	**-**	**861796**	**861797**
Mounting plates		270 x 170	270 x 270	370 x 270	370 x 270	370 x 370	570 x 270	570 x 370	570 x 370
Sheet steel, 1.5 mm	**Ref. no.**	**861798**	**861799**	**861800**	**861800**	**861801**	**861802**(1)	**861803**	**861803**
Pertinax, 5 mm	**Ref. no.**	**861804**	**861805**	**861806**	**861806**	**861807**	**861808**(1)	**861809**	**861809**
DIN-rail	**Ref. no.**	200 **861810**	300 **861811**	300 **861811**	300 **861811**	400 **861812**	300 **861811**	400 **861812**	400 **861812**
	Ref. no.	300 **861811**	**-**	400 **861812**	400 **861812**	**-**	**-**	**-**	**-**
Pack = 10 pieces									
Aluminium cover plate	**Ref. no.**	**861813**	**861814**	**861815**	**861815**	**861816**	**861817**	**861818**	**861818**
Fixation set	**Ref. no.**	**861819**	**861819**	**861819**	**861819**	**861819**	**861819**	**861819**	**861819**

(1) Order separate spacer set **861824** (pack = 6 pieces)

Accessories

Wall mounting brackets

861820	4

Cover screws

861821	4

As replacement

External hinge

861825	1 set

Includes 2 hinges to be mounted at the enclosure/cover side. Drilling of holes is necessary.

Manual cover screws

861822	12

In exchange of standard cover screws

Self-tapping screws

861823	50

For mounting components on the bottom of the enclosure

New

Modular polyester boxes

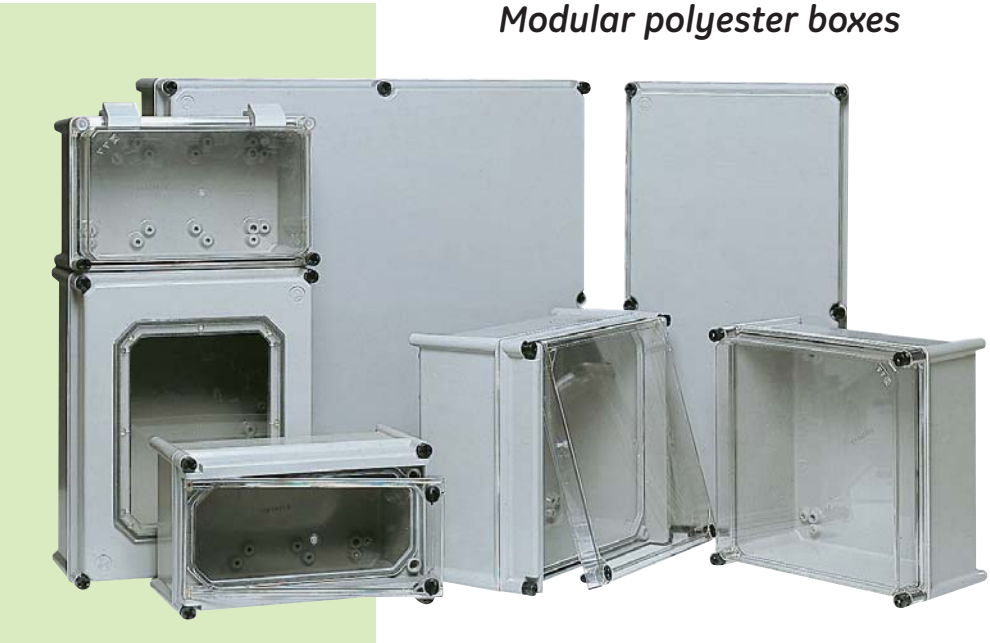

Standards

IEC 60439-1	EN 60439-1
IEC 60529	EN 60529
IEC 62208	EN 62208

Approvals

- Boxes with polyester cover: types 3, 3R, 4, 4X, 6, 6P, 12 and 13
- Boxes with polycarbonate cover: types 3, 3R, 4, 4X, 12 and 13
- Boxes with hinged cover: types 3, 3R, 4, 4X, 6, 12 and 13

Available on request

- Boxes with polyester cover: types 3, 3R, 4, 4X, 6, 6P, 12 and 13
- Boxes with polycarbonate cover: types 3, 3R, 4, 4X, 12 and 13
- Boxes with hinged cover: types 3, 3R, 4, 4X, 6, 12 and 13

Available on request

Lloyd's Register of Shipping

Germanischer Lloyd

Features

- The range consists of nine boxes based on the 300 and 185 mm modules.
- The bases are made of light grey (RAL 7035), hot moulded glass fibre reinforced polyester, dyed in mass. These come complete with M4 threaded inserts (Dodge) for fixing a mounting plate or mounting frame.
- The cover is made of either transparent polycarbonate or light grey (RAL 7035) hot moulded glass fibre reinforced polyester, dyed in mass.
- APO-boxes provide optimum security to both operators and equipment because they feature total insulation and protection degree IP67 according to EN/IEC 60529
- Protection degree IK10 against external mechanical impacts according to EN/IEC 62262
- Each large box is a multiple of a smaller one. Its fixing points are also a multiple of those of a small box. These fixing points are blind holes for M4 threaded inserts.
- Four to six blind holes for M6 threaded inserts are also provided in each base.
- APO polyester boxes are designed for both wall and pole mounting.
- The box can be readily worked with conventional tools such as drills, cutting mills, saws punches, etc.
- Versatile service conditions: polyester enclosures can withstand continuous temperatures up to70°C (peak temperatures up to 150°C) and the transparent polycarbonate covers resist service temperature up to 120°C
- Rated insulation voltage Ui = 1000V.
- APO boxes are UL listed, as per UL Standard 508
  They are also CSA approved.

Applications

- Industry
- Shipyards
- Breweries
- Public utilities
- Oil refineries
- Steel works
- Petro-chemical plants
- Photovoltaic

Overview of the range ● Page A.3
Dimensional drawings ● Page I.16
Specifications for tender documents ● Page I.50
Power dissipation values ● Page I.66

Modular panel building

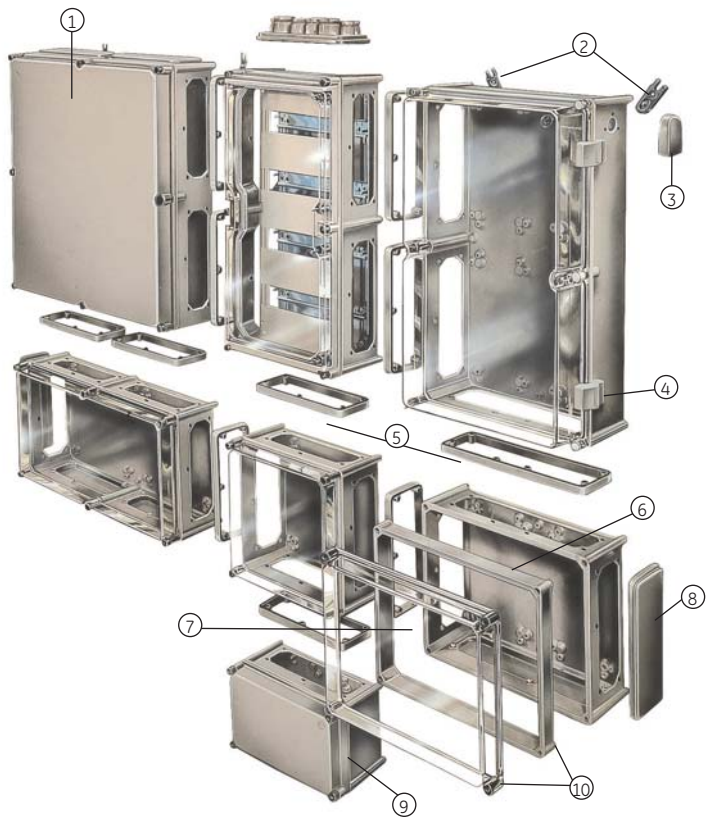

① Polyester cover

② Wall mounting feet, stainless steel or non-metallic

③ Ventilator

④ Non-metallic hinge

⑤ Coupling collar

⑥ Depth extension frame

⑦ Clear polycarbonate cover

⑧ Coupling cover plate

⑨ Twist lock latch

⑩ Foamed polyurethane gaskets with tongue and groove labyrinths at all seal points

Optimal use of the modular design

The unique modular concept of APO boxes enables mounting of different standard functions in coupled boxes.

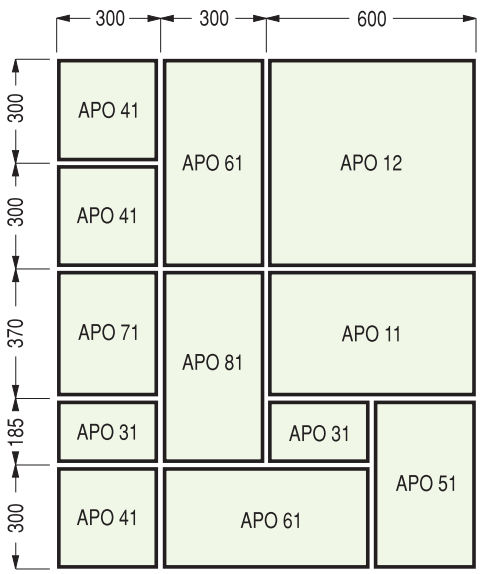

Technical data

Ingress protection according IEC 60529	
Single enclosure	
with polyester cover	IP67
with transparent cover	IP66
with hinged cover	IP67
Enclosure with flange plate	IP67(1)
Enclosure combination	IP67(1)
Enclosure with depth extension frame	IP66

(1) dependent on cover version used

Modular polyester boxes

		Type	APO 1	APO 31	APO 41	APO 71
	Box with polyester cover IP67 Light-grey cover with fixing screws	**H x W x D**	186 x 151 x 140	302 x 186 x 175	302 x 302 x 175	372 x 302 x 175
		Ref. No.	**856048**	**856049**	**856050**	**856051**
		Weight (kg)				
	Box with polycarbonate cover IP66 Transparent cover with fixing screws	**H x W x D**	186 x 151 x 140	302 x 186 x 175	302 x 302 x 175	372 x 302 x 175
		Ref. No.	**856057**	**856058**	**856059**	**856060**
		Weight (kg)				
	Box with hinged cover IP67 Transparent cover with thumb screws for the door	**H x W x D**		302 x 186 x 175	302 x 302 x 175	372 x 302 x 175
		Ref. No.	–	**856066**	**856067**	**856068**
		Weight (kg)				
	Box with hinged cover IP55 Light-grey cover	**H x W x D**	186 x 151 x 140	302 x 186 x 175	302 x 302 x 175	372 x 302 x 175
		Ref. No.	**856071**	**856072**	**856073**	**856074**
		Weight (kg)				
	Box with hinged cover and lock (ventilated) IP44 Light-grey cover	**H x W x D**		302 x 186 x 175	302 x 302 x 175	372 x 302 x 175
		Ref. No.	–	**856080**	**856081**	**856082**
		Weight (kg)				

Pack: 1

APO 51	APO 81	APO 61	APO 11	APO 12
488 x 302 x 175 **856052**	558 x 302 x 175 **856053**	603 x 302 x 175 **856054**	603 x 372 x 175 **856055**	603 x 603 x 175 **856056**
488 x 302 x 210 **856061**	558 x 302 x 210 **856062**	603 x 302 x 210 **856063**	603 x 372 x 210 **856064**	603 x 603 x 210 **856065**
488 x 302 x 175 **856069**	–	603 x 302 x 175 **856070**	–	–
488 x 302 x 175 **856075**	558 x 302 x 175 **856076**	603 x 302 x 175 **856077**	603 x 372 x 175 **856078**	603 x 603 x 175 **856079**
488 x 302 x 175 **856083**	558 x 302 x 175 **856084**	603 x 302 x 175 **856085**	603 x 372 x 175 **856086**	–

Modular polyester boxes

	Type	APO 1	APO 31	APO 41	APO 71
Base with plain sides	H x W x D	186 x 151 x 85	302 x 186 x 131	302 x 302 x 131	372 x 302 x 131
	Ref. No.	**856000**	**856001**	**856002**	**856003**
	Pack	4	4	4	4
Base with 1 open side Sizes in box refer to location of open side panel	H x W x D		302 x 186 x 131	302 x 302 x 131	372 x 302 x 131
	Ref. No.	–	**852057**	**852079**	**852135**
	Pack		4	4	4
Base with 2 open sides Sizes in box refer to location of open side panel	H x W x D		302 x 186 x 131	302 x 302 x 131	372 x 302 x 131
	Ref. No.	–	**856009**	**856010**	**856011**
	Pack		4	4	4
Base with 4 open sides	H x W x D		302 x 186 x 131	302 x 302 x 131	372 x 302 x 131
	Ref. No.	–	**856017**	**856018**	**856019**
	Pack		4	4	4
Polyester cover Light-grey cover with fixing screws	H x W x D	186 x 151 x 45	302 x 186 x 45	302 x 302 x 45	372 x 302 x 45
	Ref. No.	**856025**	**856026**	**856027**	**856028**
	Pack	4	4	4	4
Polycarbonate cover Transparent cover with fixing screws	H x W x D	186 x 151 x 45	302 x 186 x 45	302 x 302 x 45	372 x 302 x 45
	Ref. No.	**851196**	**851173**	**851277**	**851176**
	H x W x D				
	Ref. No.	–	–	–	–
	Pack	4	4	4	4
Hinged cover Transparent cover with thumb screws for the door	H x W x D		302 x 186 x 45	302 x 302 x 45	372 x 302 x 45
	Ref. No.	–	**856034**	**856035**	**856036**
	Pack		4	4	4
Depth extension frame Glass fibre reinforced polyamide PA6	H x W x D	186 x 151 x 35	302 x 186 x 35	302 x 302 x 35	372 x 302 x 35
	Ref. No.	**856040**	**856041**	**856042**	**856043**
	Pack	4	4	4	4
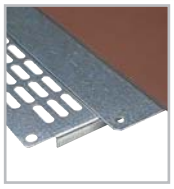 **Mounting plate** Pertinax 5 mm Sendzimir zinc coated sheet steel 2 mm Perforated 1.5 mm (For sliding nuts, see I.13)	H x W	140 x 105	228 x 139	254 x 228	298 x 254
	Ref. No.	**851190**	**851187**	**851278**	**851181**
	H x W	134 x 99	249 x 134	249 x 249	319 x 249
	Ref. No.	**851191**	**851188**	**851279**	**851185**
	H x W	134 x 99	249 x 134	249 x 249	319 x 249
	Ref. No.	**852874**	**852875**	**852876**	**852877**
	Pack	1	1	1	1
Blind cover plate Covidur 1.5 mm	H x W	150 x 115	265 x 150	265 x 265	335 x 265
	Ref. No.	**851189**	**851186**	**851281**	**851180**
	Pack	1	1	1	1

APO 51	APO 81	APO 61	APO 11	APO 12
488 x 302 x 131 **856004** 2	558 x 302 x 131 **856005** 2	603 x 302 x 131 **856006** 2	603 x 372 x 131 **856007** 2	603 x 603 x 131 **856008** 2
488 x 302 x 131 **854103** 2	558 x 302 x 131 **852436** 2	603 x 302 x 131 **852117** 2	603 x 372 x 131 **852446** 2	603 x 603 x 131 **852451** 2
488 x 302 x 131 **856012** 2	558 x 302 x 131 **856013** 2	603 x 302 x 131 **856014** 2	603 x 372 x 131 **856015** 2	603 x 603 x 131 **856016** 2
488 x 302 x 131 **856020** 2	558 x 302 x 131 **856021** 2	603 x 302 x 131 **856022** 2	603 x 372 x 131 **856023** 2	603 x 603 x 131 **856024** 2
488 x 302 x 45 **856029** 2	558 x 302 x 45 **856030** 2	603 x 302 x 45 **856031** 2	603 x 372 x 45 **856032** 2	603 x 603 x 45 **856033** 2
488 x 302 x 80 **852092** – 2	558 x 302 x 80 **851193** – 2	603 x 302 x 80 **851282** 603 x 302 x 45 **851283** 2	603 x 372 x 80 **851290** – 2	603 x 603 x 80 **852280** – 2
488 x 302 x 45 **856037** 2	–	603 x 302 x 45 **856038** 2	603 x 372 x 115 **856039 (1)** 2	–
–	558 x 302 x 60 **856044** 2	603 x 302 x 60 **856045** 2	603 x 372 x 60 **856046** 2	603 x 603 x 60 **856047** 2
413 x 254 **852091** 435 x 249 **852095** 435 x 249 **852878** 1	484 x 254 **851170** 505 x 249 **851171** 505 x 249 **852879** 1	528 x 254 **851286** 550 x 249 **851287** 550 x 249 **852880** 1	528 x 324 **851289** 550 x 319 **851292** 550 x 319 **852881** 1	555 x 555 **852174** 550 x 555 **852178** 550 x 555 **852882** 1
450 x 265 **852090** 1	-	-	-	-

(1)	**856039**	1

Hinged cover with side flange

Accessories

Combi end-plates in polystyrene

	Width		
4 x M20/16 + 1 x M32/25	185	**856096**	1
2 x M32/25 + 3 x M25/M20 + 4 x M20/16	300	**856131**	1
9 x M25/20	300	**856097**	1
2 x M50/40 + 2 x M25/20	300	**856098**	1
13 x M20/16	300	**856099**	1
3 x M40/32 + 2 x M20/16	300	**856100**	1
1 x M40/32 + 10 x M25/20	370	**856101**	1
13 x M25/20	370	**856102**	1

Cable glands, see p. H.2

Blind end-plates in polyester

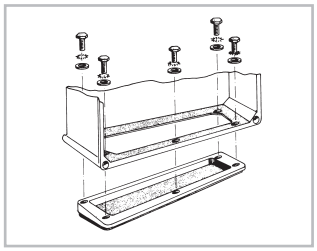

For dimensions of maximum opening, see page I.18

	Width		
	185	**856103**	1
	300	**856104**	1
	370	**856105**	1

Coupling frames

Coupling frames are made of polyamide (rubber).

- Complete with template.
- The smallest side of the coupling frame fits the front side of the box.
- The maximum passage between two coupled boxes can be marked off with the aid of the template. Within this mark, any desired opening can be made.

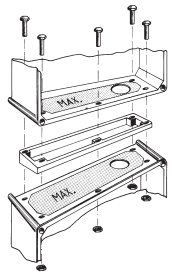

Width		
185	**856106**	1
300	**856107**	1
370	**856108**	1

For dimensions of maximum opening, see page I.18

Cable-end boxes

In polyester (funnel-shaped in polystyrene)			For side	Type	Max Ø cable (mm)	Nr. of clamps provided
	856115	1	300	APO31	1 x 75	1
	856116	1	300	APO31	2 x 75	2
	856117	1	300	APO41	1 x 75	1
	781936	1	300	APO61	1 x 75	1
	781937	1	300	APO71	1 x 71	1
	856118	1	370	APO71	3 x 75	1

Dimensions, see page I.19

Cable clamps[1]

	851105	1

For direct mounting to cable end box.
Max. Ø cable: 75 mm
Used in APO 31 and APO 71
Enclosure side 185, 300, 370 mm

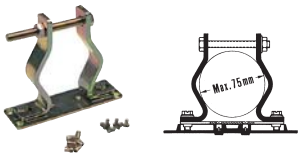

	851110	1

Universal stress relieving cable clamp.
Max. Ø cable: 75 mm
Used in APO 41
Enclosure side 300, 370, 600 mm

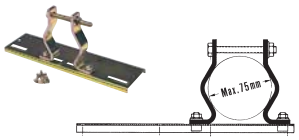

	851111	1

For mounting to universal stress relieving attachment
Max. Ø cable: 75 mm
Spare part

(1) See drawing on page I.19

Accessories

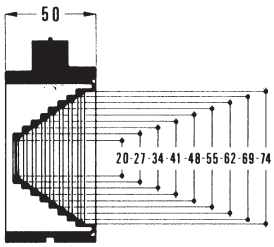

Rubber cable sleeves

- For direct mounting
- Complete with template

851106	1

For use as a sealing gland on cable end boxes.

Max. Ø cable: 75 mm

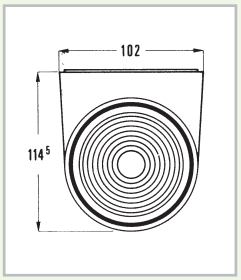

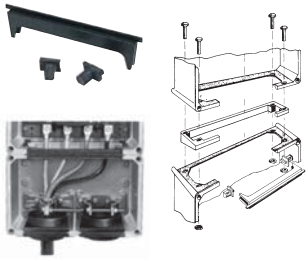

Bridges

Make heavy connections easier whilst guaranteeing that the original degree of protection is maintained.

851103	1

Fits the 300 mm side.

851112	1

Fits the 370 mm side.

Safety locks with handle*

Complete with drilling template, keys and mounting hardware.

852020	1

2 keys V 2432E

Safety locks without handle

852021	1

Square key 8 mm

852022	1

Triangular key 8 mm

852024	1

Triangular key 11 mm

852023	1

Double-bit yale key 3 mm

* Not usable with hinged cover.

Air vents IP44

Two air vents must be mounted per enclosure to ensure sufficient air circulation and prevent water condensation.

Complete with template and screws.

The air vents are preferably mounted in the upper and lower part of the base.

833677	1

Set of 2 pieces in polyamide.

RAL 7035

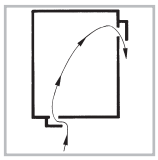

Pole mounting

- At the rear of enclosure, C-profiles are installed.
- Around the pole, a fixation (holding) band is installed. On the C-profile, clamps are placed to catch the holding band securely.

890510	1

Set of 2 C-profiles for side 300 and 370 mm (fixation band not included).

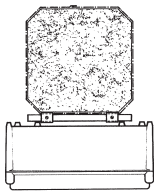

Mounting brackets

851266	1

Set of 4 pieces in glass fibre reinforced polyamide

- For external fixing points.
- Direct fixing through the four corner holes of the enclosure.
- If extension frames are to be used, the mounting brackets shall be mounted before the frames.
- Maximum permissible component weight: 150 kg.

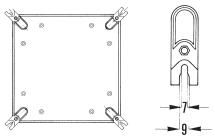

852025	1

Set of 4 pieces in stainless steel (type 304)

- For extremely severe working conditions.
- For band iron fixation to round poles.
- The four brackets are mounted directly at the rear of the box in reinforcements provided for that purpose.
- Fixing by M4 threaded bushes (supplied).
- Maximum permissible component weight: 150 kg.

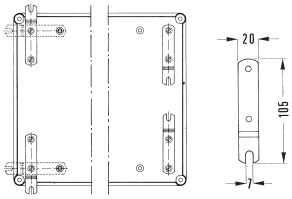

Accessories

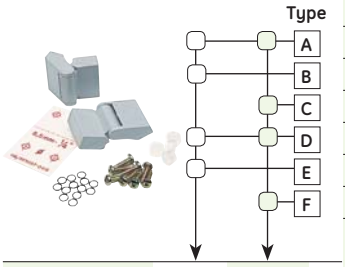

Selection	APO 1	Base 31-41-71-51 81-61-11-12
Polyester cover	A	A
Polyester cover + depth extension	B	C
Polycarbonate cover	D	D
Polycarbon. cover + depth extension	E	F

Hinges

A	856109	1
B	856110	1
C	856111	1
D	856112	1
E	856113	1
F	856114	1

- In order to enable hinge mounting, holes must be drilled in the cover and in either the base or the extension frame. Templates for drilling these holes are supplied with eacht set. The type of hinge depends on the required combination.
- Hence six sets of hinges are available. Each set consists of two hinges, srews, a drilling template, the mounting instructions and, if necessary, spacer shims.

Hinge screw

	851256	1

Set of 2 pieces

Remark: the box must be mounted prior to fitting the hinge screw.

Triangular TTR sealing screw

	851262	1

For screwed cover.

Set of 2 pieces.

	852016	1

For hinged cover.

Set of 2 pieces.

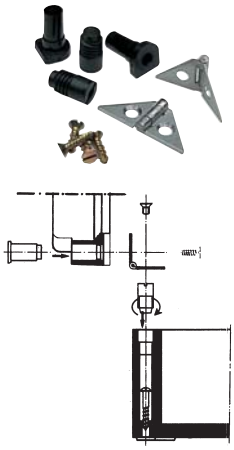

Cover hinges

	851268	1

Set of 2 pieces in stainless steel (complete with fixing hardware)

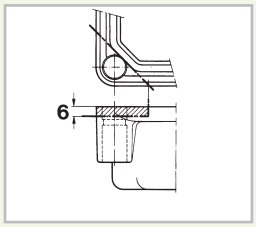

Cover must be milled along the dotted line to a depth of 6 mm prior to hinge mounting.

Spanner

	851016	1

For triangular TTR sealing screw.

Sealing plate

	851260	1

Set of 2 pieces.

Cover fixing screws

	851255	50

Slotted screw

	852015	50

Screws for hinged cover

Padlocking set

	852004	1

Max. diameter of padlock: 8 mm.

Thumb grip

For cover screws or hinge screws.

	851259	1

Set of 50 pieces

	851258	1

Set of 2 pieces

Threaded inserts

	851026	100

M4 Dodge type inserts

	851371	100

M6 Dodge type inserts x 12, 50 mm

	851027	1

M4 special tool for securing

	852003	1

M6 special tool for securing

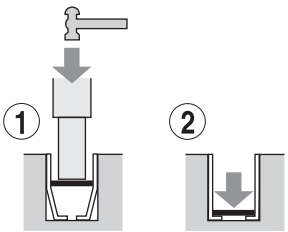

Universal fuseboard frames

Type	APO 31	APO 41	APO 71	APO 51	APO 61
	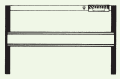		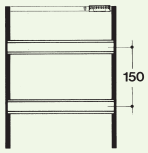	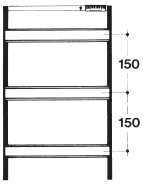	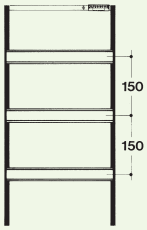
	302 x 186 14 modules **851326**	302 x 302 14 modules **851336**	372 x 302 28 modules **851353**	488 x 302 42 modules **852283**	603 x 302 42 modules **851345**
Universal fuseboard frames Includes: - Empty frames fitted with an earth terminal and cover plate. - The packaging includes fixing screws and height extension studs.	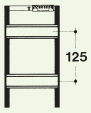	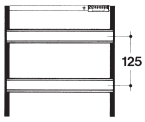	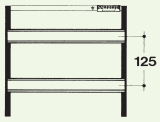		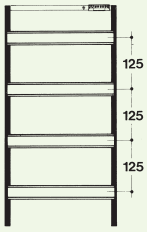
	302 x 186 14 modules **851330**	302 x 302 28 modules **851338**	372 X 302 36 modules **851358**		603 x 302 56 modules **851347**

Accessories

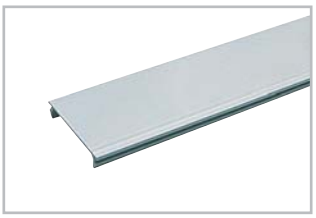

Blank plate

for screening off rectangular openings

828056	1m

For cutout of 45 mm

Marking strip

self adhesive

851321	1m

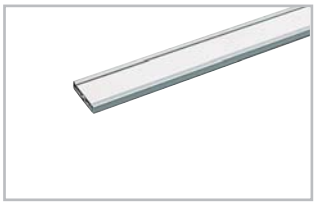

Blanking plate

610142	4

For 4 modules

610484	500

For 4 modules

Branch terminals

6 x 10 mm^2 + 2 x 16 mm^2

to clip on 12 x 2 mm bar

610186	4

Earth bar – green

610187	4

Neutral bar – blue

Equipped individual units

Type	APO 31	APO 41	APO 71	APO 61	APO 11
	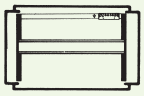		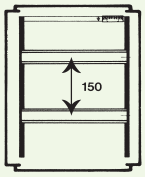	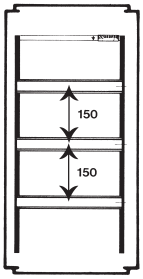	
Enclosures for DIN-rail equipment					
Includes: - base with two open sides - with combi end plates top: 13 x M20/16 bottom: 2 x M32/25 + 3 x M25/20 + 4 x M20/16 - base frame with earth connector and coverplate - transparent pivoting cover	186 x 302 x 175 14 modules **856119**		372 x 302 x 175 28 modules **856120**	603 x 302 x 175 42 modules **856121**	
	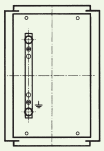	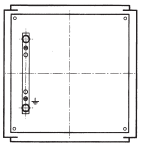	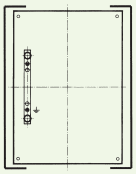		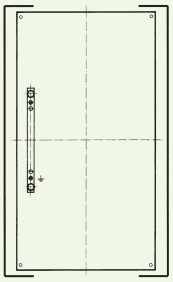
Enclosures for disconnector loadbreak switches (Dilos) and fused disconnector loadbreak switches (Fulos)					
Includes: - base with two open sides - combi end plates: **APO31** on top and bottom: side 185: 4 x M20/16 + 1 x M32/25 **APO 41** on top and bottom: side 300: 2 x M50/40 + 2 x M25/20 **APO 71** and **APO 11** are with 2 open sides, cable entry plates are to be ordered separately, see p. A.19 - mounting plate with threaded holes and earthing connector - transparent cover with handle cut-out and with screws - extension shaft and operating handle	302 x 186 x 175 DILOS 1 40/63/80/100/125A 3P/4P + ⏚ **856122**	302 x 302 x 175 DILOS 2 160/200A 3P/4P + ⏚ **856123** DILOS 1H 40/63/125A 3P/4P + ⏚ FULOS 000 32/63/100A 3P/4P + ⏚ **856124**	372 x 302 x 175 DILOS 3 160/200/250/315A 3P/4P + ⏚ **856125** FULOS 00 160A 3P/4P + ⏚ FULOS 0 160A 3P/4P + ⏚ **856126**		603 x 372 x 270 DILOS 4 400/500/630A 3P/4P + ⏚ FULOS 1 250A 3P/4P + ⏚ FULOS 2 400A 3P/4P + ⏚ **856127**

Disconnector loadbreak switches and fused disconnector loadbreak switches are to be ordered separately

Equipped individual units

Type	APO 31	APO 41	APO 71	APO 61	APO 11
	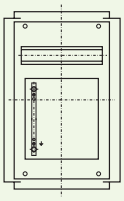				
Enclosures for loadbreak switches (Dilos) and fuse bases **Includes:** - base with two open sides - with combi end plates top and bottom: 4 x M20/16 + 1 x M32/25 - one DIN-rail and mounting plate with earthing - transparent cover with handle cut-out and with screws - extension shaft and operating handle **Disconnector loadbreak switches, fuse bases and fuses are to be ordered separately**	302 x 186 x 175 DILOS 1 40/63/80A 3P/4P + ⏚ **856128**				
				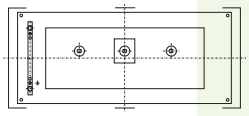	
Enclosures for changeover switches (Dilos/Fulos) Includes: - base with two open sides - cable entry plates are optional, see p. A.22 - mounting plate with change-over system (I-O-II) and earth bar - transparent cover with handle cut-out and with screws - extension shaft and operating handle **Changeover switches are to be ordered separately**				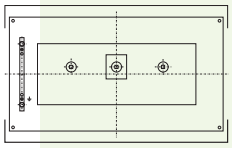 603 x 302 x 210 DILOS 1H 125A 3P/4P + ⏚ FULOS 000 32/63/100A 3P/4P + ⏚ **856129**	603 x 372 x 270 DILOS 3 160/200/250/315A 3P/4P + ⏚ FULOS 00 160A 3P/4P + ⏚ FULOS 0 160A 3P/4P + ⏚ **856130**

Notes

B.4 **MultiCab** - Medium sized multipurpose cabinets
B.6 **ARIA** - Universal polyester cabinets
B.16 **PolySafe** - Multipurpose polyester cabinets

Notes

Overview insulated wall mounting cabinets

MultiCab IP65	ARIA IP66	PolySafe IP65
300 x 200 x 180	315 x 215 x 170	500 x 500 x 320
300 x 300 x 180	415 x 315 x 170	500 x 750 x 320
400 x 300 x 180	515 x 415 x 230	750 x 500 x 320
500 x 400 x 200	615 x 415 x 230	750 x 750 x 320
600 x 400 x 220	735 x 535 x 270	750 x 1000 x 320
	835 x 635 x 300	750 x 1250 x 320
	1035 x 835 x 300	1000 x 500 x 320
		1000 x 750 x 320
		1000 x 1000 x 320
		1000 x 1000 x 320
		1000 x 1250 x 320
		1250 x 750 x 320
		1250 x 1000 x 320
		1250 x 1000 x 320

H x W x D in mm

Medium sized multipurpose cabinets

Quick-lock cover
latch or double bit

Smooth cover
no disturbing lock-elements

Many variations
39 different versions

Standard

IEC 62208

Approvals

Documents available on request

RoHS COMPLIANT

Features and benefits

- 5 basic dimensions from 300x200 up to 600x400 mm.
- In 3 different depths: 180-200-220 mm.
- 39 different cabinets in total!
- Made out of strong and reliable polycarbonate or ABS.
- Very high surface finish quality.
- High protection degree IP65 - IK08
- Grey and transparent cover versions.
- Smooth side walls.
- Many fixation possibilities in the base for mounting plate, DIN-rails, etc. by means of self-tapping screws.
- Hinged cover with latch or double-bit locking.
  Lock installed at coverside, guaranteeing full visibility on components installed.
- Whole cover in transparent material, full visibility on built-in components.
- Wide rectangular front opening in base, no edge re-inforcements.
- Sturdy base, material thickness sufficient for direct cable gland threading.
- Customisation possibilities i.e. cut-outs.

Applications

- Automation and control applications
- Electronic application in data and telecom
- Commercial and industrial distribution boxes

Overview of the range ● Page B.3
Dimensional drawings ● Page I.15
Specifications for tender documents ● Page I.51

New

Medium sized multipurpose cabinets

	Type	MC 32	MC 33	MC 43	MC 54	MC 64
	H x W x D	300 x 200 x 180	300 x 300 x 180	400 x 300 x 180	500 x 400 x 200	600 x 400 x 220
Polycarbonate, grey cover	Ref. No.	834000	-	834005	834008	-
ABS, grey cover	Ref. No.	834026	-	834031	834034	-
Latch locking on short side						
Polycarbonate, grey cover	Ref. No.	834001	834003	834006	834009	834011
ABS, grey cover	Ref. No.	834027	834029	834032	834035	834037
Latch locking on long side						
Polycarbonate, grey cover	Ref. No.	834002	834004	834007	834010	834012
ABS, grey cover	Ref. No.	834028	834030	834033	834036	834038
Double-bit locking on long side						
Polycarbonate, transparant cover	Ref. No.	834013	-	834018	834021	-
Latch locking on short side						
Polycarbonate, transparant cover	Ref. No.	834014	834016	834019	834022	834024
Latch locking on long side						
Polycarbonate, transparant cover	Ref. No.	834015	834017	834020	834023	834025
Double-bit locking on long side						
Mounting plates		270 x 170	270 x 270	370 x 270	470 x 370	570 x 370
Sheet steel, 1.5 mm	Ref. No.	861798	861799	861800	834039	861803
Pertinax, 5 mm	Ref. No.	861804	861805	861806	834040	861809
DIN-rail	Ref. No.	200 861810	300 861811	300 861811	400 861812	400 861812
	Ref. No.	300 861811	-	400 861812	500 834041	-
Pack = 10 pieces						
Aluminium cover plate	Ref. No.	861813	861814	861815	834042	861818
Fixation set	Ref. No.	861819	861819	861819	861819	861819
Wall mounting brackets	Ref. No.	861820	861820	861820	861820	861820
Pack = 4 pieces						

New

Universal polyester cabinets

Standards

IEC 60439-1	EN 60439-1
IEC 60529	EN 60529
IEC 62208	EN 62208

Approvals

UL types 3, 3R, 3S, 4, 4X, 12 and 13
Available on request

CSA types 3, 3R, 3S, 4, 4X, 12 and 13
Available on request

Lloyd's Register of Shipping

Features

- The range is available in seven sizes, ranging from 315 x 215 to 1035 x 835 mm.
- The cabinets are made of light-grey (RAL 7035) hot moulded, glass fibre reinforced polyester, dyed in mass. The enclosure is furnished with four threaded studs and bolts for mounting plate or mounting frame installation.
- The enclosure provides total insulation and a protection degree of **IP65/66** following EN/IEC 60529.
- Protection degree IK10 against external mechanical impacts according to EN/IEC 62262 (IK07 for cabinets with glazed door).
- Resists temperatures up to 70°C in continuous use (peak temperatures up to 150°C).
- Self extinguishing and halogen-free.
- Rated insulation voltage Ui = 1000V.

Applications

- Heavy industry
- Steel mills
- Petrochemical plants
- Temporary connection (for construction sites)
- Brewery
- Public services
- Street signalisation
- Telecom
- Photovoltaic energy

Overview of the range ● Page B.3
Dimensional drawings ● Page I.20
Specifications for tender documents ● Page I.52
Power dissipation values ● Page I.68

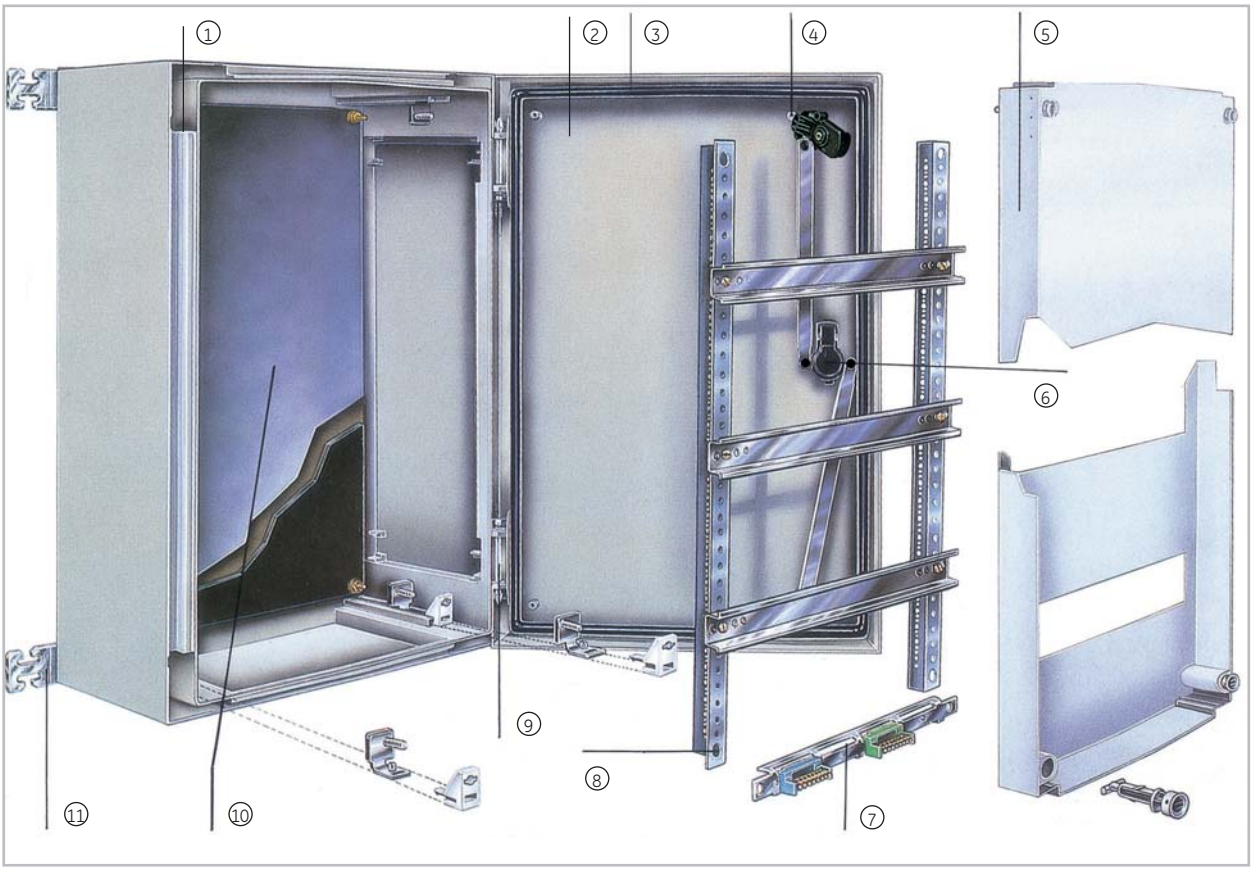

① Housing in one piece
② Removable door: left- or right-hand hinged (not for version with swing-handle)
③ Slightly curved gasket-slot avoiding stagnant water
④ Fixing points at rear of door
⑤ Cover plate:
- polyester RAL 7035
- hinged
- independent
- reversible
- sealable
- with snap-on fixing

⑥ Three point closing system with one lock. Exchangeable locks.
⑦ Independent rail for terminal blocks
⑧ Mounting frame
- removable
- predrilled
- reinforced DIN-rails

⑨ Integrated hinges. Door opens 180°
⑩ Mounting plate
- metal
- pertinax
- perforated

⑪ Direct wall fixing points or wall fixing lugs in plastic material or stainless steel.

- Monobloc type of cabinet
- In and outdoor use
- 7 dimensions 315x215x170 up to 1035x835x300 mm
- 1, 2 or 3 point locking mechanism
- Glass fibre reinforced polyester
- Protection degree **IP65/66**-IK10 (plain door)
- Fitted for mounting plate and modular mounting frame
- Wall mounting/pole fixing
- Execution on base (metal or concrete)
- Approvals: UL/CSA/Lloyd's Register

Self-adhesive rainhood
(as a standard accessory with each cabinet) avoiding dripping water drops while opening the door

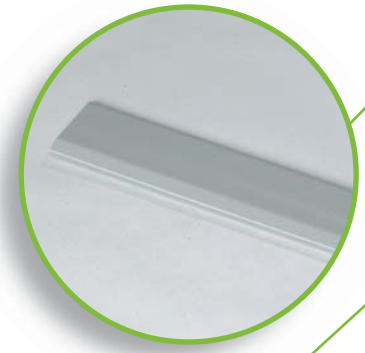

Mounting frame with individual modular cover plates for DIN-rail equipment
150 mm between centres, up to 180 modules !

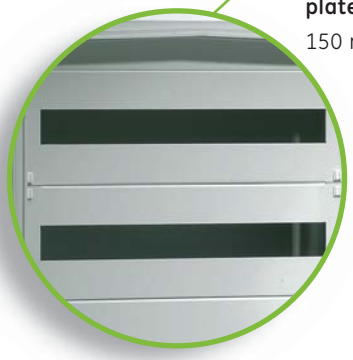

Construction

Petrochemicals

Conveyer belts

Durable polyurethane gasket

Ergonomic new closing mechanism

- Reducing closing force by 25%
- Can also be operated by swing-handle

Patented doorlifter for bigger dimensions (ARIA 75 and larger) ensuring the door takes it's center position during closing

Traffic

Water treatment

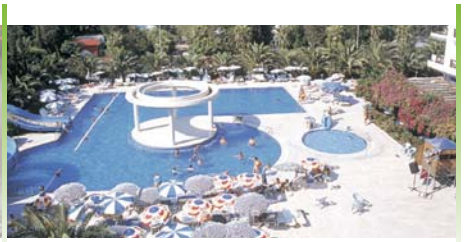

Camping and Hotels

Universal polyester cabinets

	Type	ARIA 32	ARIA 43	ARIA 54	ARIA 64
	H x W x D	315 x 215 x 170	415 x 315 x 170	515 x 415 x 230	615 x 415 x 230
Cabinet IP65 - IK10 With double bit lock 3 mm	Ref. No.	-	-	831809 2-point	831810 2-point
Cabinet IP66 - IK10 With central double bit lock 3 mm	Ref. No.	831025	831036	831052	831065
Cabinet IP66 - IK10 With central swing handle for profile half cylinder	Ref. No.	-	831034	831051	831064
Glazed door cabinet IP65 - IK07 With double bit lock 3 mm	Ref. No.	–	-	831812 2-point	831813 2-point
Glazed door cabinet IP66 - IK07 With central double bit lock 3 mm	Ref. No.	–	831815	831129	831130
Glazed door cabinet IP66 - IK07 With central swing handle for profile half cylinder	Ref. No.	–	–	831284	831285

Pack: 1

ARIA 75	ARIA 86	ARIA 108
735 x 535 x 270	835 x 635 x 300	1035 x 835 x 300
831811 2-point	-	-
831081	831098	831112
831080	831097	831111
831814 2-point	-	-
831131	831132	831133
831286	831287	831288

Applications

- Industry
- Steel works
- Oil refineries
- Breweries
- Shipyards
- Public utilities
- Photovoltaic energy
- Heavy industry

Universal polyester cabinets - Accessories

	Type	ARIA 32	ARIA 43	ARIA 54	ARIA 64
	H x W x D	315 x 215 x 170	415 x 315 x 170	515 x 415 x 230	615 x 415 x 230
Mounting plates	H x W	250 x 150	350 x 250	450 x 350	550 x 350
Pertinax 5 mm	Ref. No.	**831027**	**831038**	**831054**	**831067**
Sendzimir zinc coated sheet steel 2 mm	Ref. No.	**831026**	**831037**	**831053**	**831066**
Metal perforated 1.5 mm	Ref. No.	**831332**	**831333**	**831334**	**831335**
Mounting frame	Ref. No.	**831030**	**831041**	**831057**	**831070**
Banks		2	2	3	3
Modules		12	24	54	54
Rail for terminal blocks	Ref. No.	**831018**	**831019**	**831020**	**831020**
Available spaces for terminal		2	3	4	4
Full cover plates					
Plain	Ref. No.	**831028**	**831039**	**831055**	**831068**
With cut-outs for DIN-rail equipment	Ref. No.	**831029**	**831040**	**831056**	**831069**
With cut-out for individual modular cover plates	Ref. No.	-	**831790**	**831791**	**831792**
Number of ind. mod. cover plates contai-nable		-	2	3	3
Individual modular cover plates IP20 **(PVC)**	H x W	-	150 x 239	150 x 343	150 x 343
Plain	Ref. No.	-	**831797**	**831799**	**831801**
With cut-out for DIN-rail equipment	Ref. No.	-	**831796**	**831798**	**831800**
Modules		-	12	17	18

Pack: 1

ARIA 75	**ARIA 86**	**ARIA 108**
735 x 535 x 270	835 x 635 x 300	1035 x 835 x 300
650 x 450	750 x 550	950 x 750
831083	**831100**	**831114**
831082	**831099**	**831113**
831336	**831337**	**831338**
831086	**831103**	**831117**
4	4	5
88	96	180
831021	**831022**	**831023**
6	7	10
831084	**831101**	**831115**
831085	**831102**	**831116**
831793	**831794**	**831795**
4	8	10
150 x 423	150 x 239	150 x 343
831803	**831797**	**831801**
831802	**831796**	**831800**
22	12	18

Common accessories

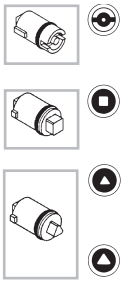

Lock inserts

To replace double-bit inserts from standard delivery

	831008	1
3 mm		
	831005	1
8 mm		
	831006	1
8 mm		
	831007	1
11 mm		

Other locks on request.

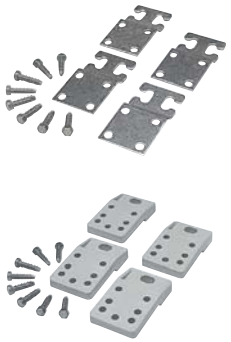

Fixing lugs

	831000	1
Set of 4 fixing lugs. 304 stainless steel.		
	831001	1
Set of 4 fixing lugs in polyamide		

Hinge supports for inner door

	831010	1
Set of 2 hinge supports for cover plate. Together with a closed cover plate an inner door can be realised.		

①

Handles

①	831003	1
Neutral handle		
①	831004	1
Handle with lock and 2 keys V2432E		
①	831180	1
Handle with lock and 2 keys 1242E		
①	831152	1
Handle with lock and 2 keys 405E		
①	831153	1
Handle with lock and 2 keys 455E		

②

②	831821	1
Handle for profile half cylinder, 40 mm (As spare part or replacement for ARIA 54 and larger - in case of new replacing double-bit lock a mechanical operation at the door is necessary		
②	843000	1
Handle for profile half cylinder, 45 mm (As spare part or replacement for ARIA 54 and larger - in case of new replacing double-bit lock a mechanical operation at the door is necessary		

③

③	831822	1
Handle for profile half cylinder for padlocking		

Profile half cylinder locks

Standard: D = 40 mm - L = 30,5 mm

	832030	1
With 2 keys V2432-E		
	832741	2
Spare keys for 832030		
	832031	1
With 2 keys 1242-E		
	832465	1
With 2 keys 455-E		
	832466	1
With 2 keys 405-E		
	843435	1
With 1 square key, 6 mm		
	832032	1
With 1 square key, 8 mm		
	832033	1
With 1 triangular key, 8 mm		
	832034	1
With 1 triangular key, 11 mm		
	832029	1
With 1 double-bit key, 3 mm		

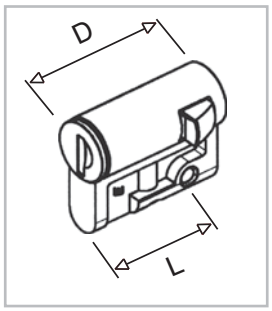

Ventilation grids

(IP44 when mounted in the double corner on ARIA)

	831009	1
Set of two ventilation grids		
Drilling Ø 34,9 mm		

Please refer to chapter G for more ventilation options.

Common accessories (continued)

Supporting chair

891854	1

For ARIA 75 and 86, for temporary connections

Pole mounting set

891608	1

For ARIA 54/64

Stainless steel fixing lugs are included.

Pole mounting with steel band (not included)

Branch terminals

6 x 10 mm^2 + 2 x 16 mm^2

to clip on 12 x 2 mm bar

610185	4
Phase bar – black	
610186	4
Earth bar – green	
610187	4
Neutral bar – blue	

Blanking plate

610142	4
For 4 modules	
610484	500
For 4 modules	

Marking strip

851321	1m
Self adhesive	

Document pocket

811516	1
DIN A4 - W x H = 325 x 180 mm	
832000	1
DIN A5 - W x H = 155 x 225 mm	

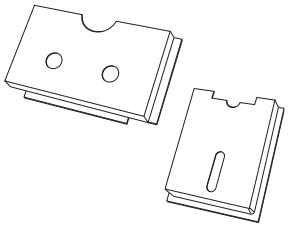

Nuts

For perforated mounting plates

831328	50
M4	
831329	50
M5	
831330	50
M6	

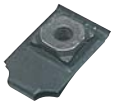

Multipurpose polyester cabinets

Standards

IEC 60529	EN 60529
IEC 62208	EN 62208
IEC 62262	EN 62262

Approvals

- Cabinets with one door:
  type 3, 3R, 3S, 4, 4X, 12, 12K and 13
- Cabinets with two doors:
  type 3, 3R, 3S, 4, 4X, 12, 12K and 13
- Coupled cabinets:
  type 3, 3R, 3S, 12, 12K and 13

Available on request

Lloyd's Register of Shipping

Ambient conditions

Indoor and outdoor stationary use, at temperatures between -50°C and 70°C in continuous use and at peak temperatures up to +150°C

Features

- 14 standard dimensions (from 500 x 500 up to 1250 x 1000) in one depth 320 mm
- Cabinets are standard factory assembled (empty or equipped)
- High protection degree **IP65**-IK10 (20J) according to IEC 60529 and EN/IEC 62262 (IP55 - IK07 for cabinets with glazed door)
- Material: self-extinguishing, hot moulded, halogen-free, fiberglass reinforced polyester (environment friendly)
- Colour: grey RAL7035, dyed in mass
- Designed for wall mounting, floor standing and pole fixing
- Coupling possibilities in height, width and depth
- Total insulation ⧈
- Door with 5-point latching mechanism
- Execution as pedestal possible
- Rated insulation voltage Ui= 1000V
- Easy recyclable: no moulded-in metal parts

Overview of the range ● Page B.3
Dimensional drawings ● Page I.22
Specifications for tender documents ● Page I.53
Power dissipation values ● Page I.70

Applications

- **Commercial**
  Leisure (market places, camping sites, harbours for pleasure crafts, amusement parks), fuel stations, car washes, launderettes and laundries, service enclosures for construction yards, ...

- **Industrial**
  Shipyards, mining, automotive, paper and pulp, food and beverage, petro-chemicals, heavy industry, transformers, system monitoring, ...

- **Utilities**
  Water treatment plants, waste management, telecommunications, traffic signaling systems, traffic management, public transport, energy distribution (electricity, gas, water), cable television (CATV), public lighting, railways, ...

Rainhood for outdoor use
- Up to IP65, not necessary
- Possibility of ventilation through cut-outs in top panel and air vents on side panels (to prevent internal condensation)
- Protection degree: IP44/IP54 in case of ventilation
- Moulded-in markings on the inside top panel shows the cut-out and fixation points

Backpanel
- Enclosed in main structure
- Has a seamless top panel as a result
- No inserts
- PUR sealing directly injected and responsible for high protection degree IP65

Wall mounting brackets
- No mounting screws necessary
- Can be mounted vertical or horizontal

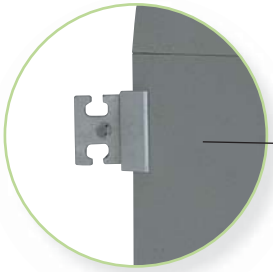

Neoprene gasket
- Preformed and premounted

Side panels
- Integrated into top and bottom
- Provide a very solid and stable construction

Mounting frame
- In Alu with standard horizontal Alu C-profiles for all four widths
- Regulation in depth possible for all sizes
- Offering a complete solution (no more sawing necessary)

Floor mounting frame
Base in polyester (height 65 mm)
- For anchoring the cabinet with the floor
- Moulded-in markings on the inside bottom panel shows the cut-out and fixation points for anchoring

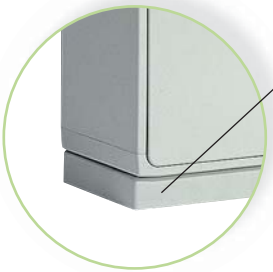

Mounting plates
- Metal 2 mm
- Pertinax 5 mm
- Metal perforated 2 mm
- Fixed (by means of HiLo) as well as adjustable in depth for all sizes

Self tapping HiLo screws
(no inserts)
- For assembling main structure and fixation of the back panel
- Makes the cabinet easily dismantled for recycling

Hinges
- Mounted directly on the side panels, each step of 250 mm
- Direct access outside the functional part of the cabinet

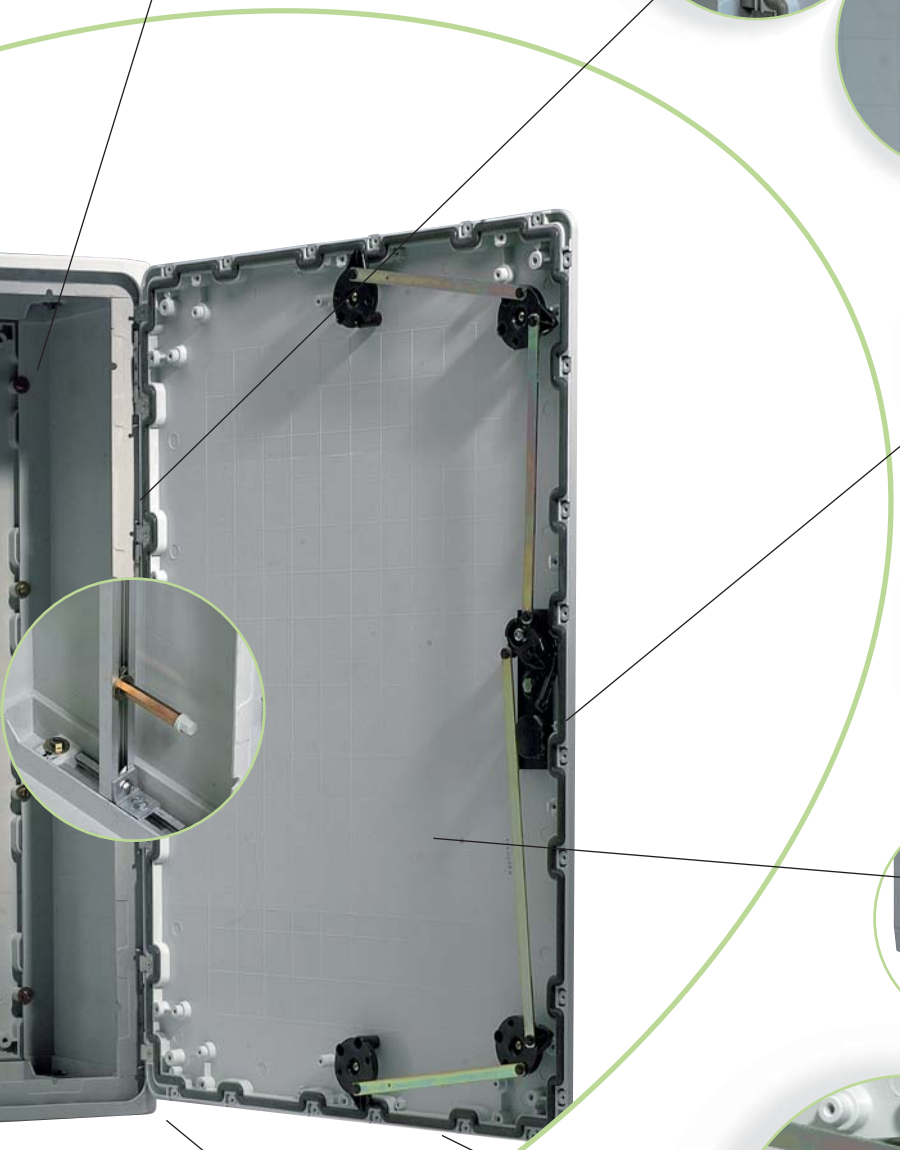

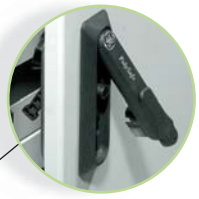

Standard ergonomic operating handle
- Premounted on the door
- Suitable for all types of profile half cylinder locks (standard depth 40 mm/ alt. depth 45 mm)
- Possibility of padlocking (no access to unauthorised persons)

Doorlifter
- For bigger dimensions
- Ensuring the door takes its center position during closing

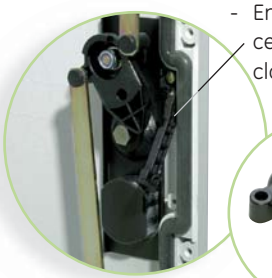

Door
- Flush mounted
- Plain or glazed
- No inserts (HiLo screws)
- Inclosed in main structure
- Has a seamless top panel as a result
- PUR sealing directly injected results in high protection degree IP65
- Opening angle 100°

Standard 5 point latching mechanism
- Operated by one handle
- Provides secure closing (IP65)

Doorstop
Prevents stressing the door hinges caused by wind in outside use.
For enclosure width 750 mm and larger.

Door conducting
For exact door positioning in the main structure

Customisation

Cabinet can be ordered with preformed cut-outs to suit your application: ease and speed of mounting.

Lay-out in compartments and internal separations as a flexible solution for the end customer (e.g. separation of distribution and instrumentation sections).

Coupling in depth by means of a depth extension kit (unlimited).

Cabinet also available with inset polycarbonate window: visability of operating components, internal signalisation.

Coupling in height and width by means of a coupling kit (see accessories): ease of extension.

Cabinet can be factory equipped and wired according to the customers requirements: ready to install and operate.

Customisation

Cabinet also available in kit-form on demand: ease of transportation, space saving storage.

Cabinet can be provided with door on the front and at the rear: easy access, two different individual compartments.

Cabinet can be supplied painted in other colours or with personal identification: environmental influence adaptation, ease of recognition, anti-graffiti.

Mounting applications

Rainhoods

Four fixing points for securing rainhood are marked off in top panel. By drilling holes in the top panel and by fitting air vents (Ref. No. 833677) on the side panels, the cabinet with rainhood will be efficiently ventilated. (IP44)
For extra depth or extra width, please contact us.

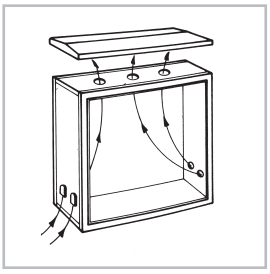

Plinth

Easily mounted in accordance with the enclosed instructions

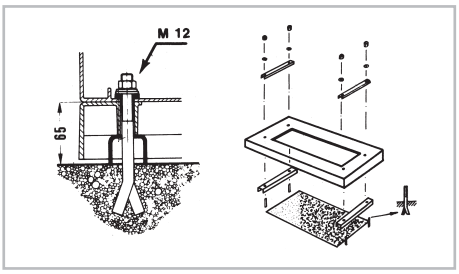

Multipurpose polyester cabinets

Depth = 320 mm	PS 220	PS 230	PS 320	PS 330	PS 340
Factory-assembled cabinet IP65 - IK10 Complete with handle and wall mounting brackets of AISI 304 stainless steel (without cylinder lock)					
Dimensions (H x W)	500 x 500	500 x 750	750 x 500	750 x 750	750 x 1000
Cabinet with plain door	**833000**	**833004**	**833008**	**833012**	**833016**
Cabinet with glazed door (polycarbonate window) (IP55)	**833001**	**833005**	**833009**	**833013**	**833017**
Weight (kg)	16	19	20	25	30
Cabinet with door on the front and at the back	**833076**	**833086**	**833219**	**833373**	**833077**
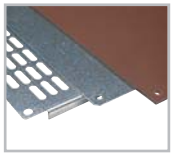					
Mounting plate Dimensions (H - 110 mm x W - 110 mm)					
Sendzimir zinc coated sheet steel 2 mm	**833500**	**833501**	**833501**	**833502**	**833504**
Perforated 2 mm	**833516**	**833517**	**833518**	**833519**	**833520**
Pertinax 5 mm	**833508**	**833509**	**833509**	**833510**	**833512**
Pertinax 10 mm	-	-	-	-	-
Depth extension kit IP65 To increase the standard depth 320 mm of the cabinet up to 640 mm. The kit consists out of two side panels, one top and bottom panel and two open backpanels.	**833584**	**833585**	**833586**	**833587**	**833588**
Rainhood For an efficient ventilation (IP44) in outdoor use by drilling holes in the top panel.	**833566**	**833568**	**833566**	**833568**	**833570**
As the standard enclosure is IP65, a rainhood is not necessary. In case of extra width or depth, please contact us.					
Plinth or floor mounting frame. Cabinet and plinth are anchored together in the flooring - H = 65 mm	**833574**	**833575**	**833574**	**833575**	**833576**
Adaptor frame for DIN-base mounting Cabinet and adaptor frame are anchored on the DIN base (polyester or concrete)	-	**833582**	-	**833582**	**833583**
DIN-base Polyester base - kit-form	-	**842100**	-	**842100**	**842101**
Mounting frame in Alu Consisting out of: four attachment brackets, two vertical C-profiles. Horizontal profiles to be ordered separately, see B.19					
Continuously adjustable	**833533**	**833533**	**833534**	**833534**	**833534**
Adjustable in steps of 12,5 mm	**833529**	**833529**	**833530**	**833530**	**833530**
Length of horizontal profile (mm)	468	718	468	718	968

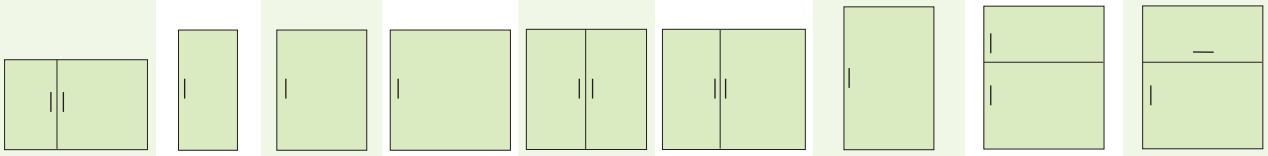

	PS 352	PS 420	PS 430	PS 440	PS 442	PS 452	PS 530	PS 542	PS 546
	750 x 1250	1000 x 500	1000 x 750	1000 x 1000	1000 x 1000	1000 x 1250	1250 x 750	1250 x 1000	1250 x 1000
	833020	833024	833028	833032	833036	833040	833044	833052	833056
	833021	833025	833029	-	833037	833041	833045	833053	833057
	38	25	30	36	39	41	37	45	45
	833374	833375	833085	833376	833377	833378	833379	833380	833381
	833506	833503	833504	833505	833505	833507	833506	833507	833507
	833521	833522	833523	833524	833524	833525	833526	833527	833527
	833514	833511	833512	833513	833513	833515	833514	833515	833515
	833385	-	-	833386	833386	833387	833385	833387	833387
	833589	833590	833591	833592	833592	833593	833594	833595	833595
	833572	833566	833568	833570	833570	833572	833568	833570	833570
	833577	833574	833575	833576	833576	833577	833575	833576	833576
	-	-	833582	833583	833583	-	833582	833583	833583
	-	-	842100	842101	842101	-	842100	842101	842101
	833534	833535	833535	833535	833535	833535	833536	833536	833536
	833530	833531	833531	833531	833531	833531	833532	833532	833532
	1218	468	718	968	968	1218	718	968	968

Accessories

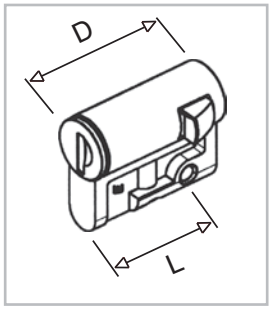

Profile half cylinder locks

Standard: D = 40 mm - L = 30,5 mm

832030	1	With 2 keys V2432-E
832741	2	Spare keys for 832030
832031	1	With 2 keys 1242-E
832465	1	With 2 keys 455-E
832466	1	With 2 keys 405-E
843435	1	With 1 square key, 6 mm
832032	1	With 1 square key, 8 mm
832033	1	With 1 triangular key, 8 mm
832034	1	With 1 triangular key, 11 mm
832029	1	With 1 double-bit key, 3 mm

Handle

833629	1	For profile half cylinder locks (as replacement)

Handle

783148	1	For two profile half cylinder locks. For utility applications.

Padlocking handle

833630	1	For padlocking (max. Ø 10 mm)

Depth adjustment kit

833528	1	Set of four brackets for depth adjustment of mounting plate (step 12,5 mm).

Door stop / Canopy stop

100° opening angle of the door or the canopy

833649	1	Left turning
833650	1	Right turning

Wall mounting brackets for standard cabinets

833651	1	(as replacement) Kit of four brackets for clip fixation at the rear of the cabinet. Made of stainless steel type 304

Wall mounting brackets for cabinets with rainhood

833624	1	Kit of four special brackets for clip fixation at the rear of the cabinet.

Rainhood

Rainhoods for enclosure combinations.

Standard rainhoods on page B.22

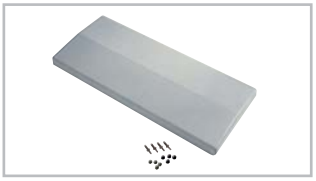

833656	1	1500 x 320 mm
833657	1	1750 x 320 mm
833658	1	2000 x 320 mm
833659	1	2250 x 320 mm
833660	1	2500 x 320 mm
833689	1	2750 x 320 mm
833661	1	3000 x 320 mm
833693	1	500 x 640 mm
833692	1	750 x 640 mm
833783	1	1000 x 640 mm
833784	1	1250 x 640 mm
833743	1	1750 x 640 mm
833691	1	2000 x 640 mm
833764	1	2500 x 640 mm

Accessories *(continued)*

Pole mounting

	833625	1
500 mm width		
	833626	1
750 mm width		

At the rear of the enclosure, C-profiles are mounted on the wall mounting brackets. Around the pole, a steel holding band is installed.
On the C-profiles, clamps are placed to fix the holding band securely.

Innerdoor IP20

H x W		
500 x 500 mm	833556	1
500 x 750 mm	833557	1
750 x 500 mm	833558	1
750 x 750 mm	833559	1
1000 x 500 mm	833561	1
1000 x 750 mm	833562	1

Frame and door with 2 double-bit locks.
For controls and automation applications.

H/B	G	J
500	330	6
750	580	8
1000	830	12
1250	1080	14

Coupling kit IP65

Depth 320 mm

	833608	1
	833610	1
	833612	1
	833614	1

Vertical and/or lateral coupling.
Package includes the neopreen gasket, coupling bolts and nuts, and the protection profiles.

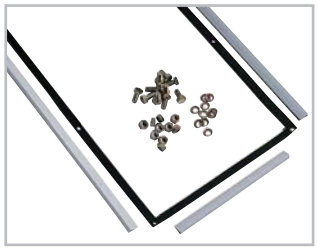

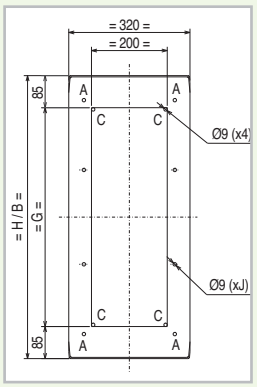

19"/ETSI swing frame

For direct fixing of 19" or ETSI modular chassis to the standard drillings.

	833680	1
For cabinets H x W = 500 x 750		
6 units 19" - 12 units ETSI		
	833681	1
For cabinets H x W = 750 x 750		
12 units 19" - 22 units ETSI		
	833682	1
For cabinets H x W = 1000 x 750		
18 units 19" - 32 units ETSI		
	833683	1
For cabinets H x W = 1250 x 750		
23 units 19" - 42 units ETSI		

Metal frame: epoxycoating RAL 7035
19"/ETSI-profiles: galvanised bichromated metal

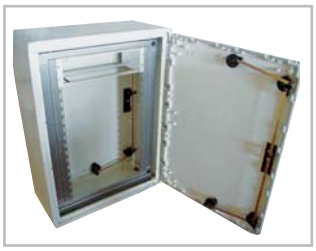

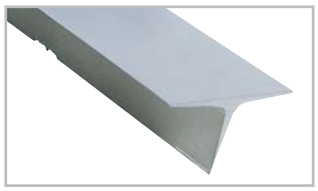

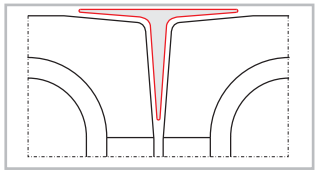

Corner profile

	833653	1

To fill up the corner between two coupled enclosures
Length = 308 mm
Use 2 profiles when coupling 4 enclosures

Blind coverplates for 19"/ETSI swing frames

To fill up the remaining free space

	833684	1
For cabinets H x W = 500 x 750		
Height of the coverplate = 32 mm		
	833685	1
For cabinets H x W = 750 x 750		
Height of the coverplate = 15 mm		
	833686	1
For cabinets H x W = 1250 x 750		
Height of the coverplate = 28 mm		

Metal: epoxycoating RAL 7035
Remark: not necessary for cabinet H x W = 1000 x 750

Accessories (continued)

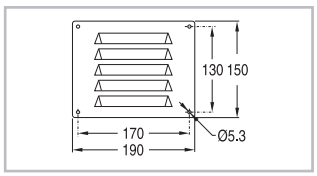

Louvre plate

832019	1

Fits on ventilation opening.

Package includes 2 grids and 4 nylon nails.

Supporting chair

891854	1

For PS220 and PS320

For enclosures for temporary connections

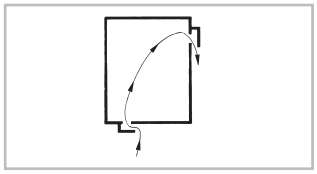

Air vents IP44

Two air vents must be mounted per enclosure to ensure sufficient air circulation and prevent condensation water.

Complete with template and screws.

Air vents are preferably mounted in the upper and lower part of the enclosure.

833677	1

Set of 2 pieces in polyamide.

RAL 7035

Please refer to chapter G for more ventilation options.

Filling pellets

422902	1

Pellets made out of clay as humidity barrier between ground and enclosure.

Recommended filling height 200-300 mm.

DIN 00-1: 1 bag

DIN 2-3: 2 bags

Notes

Modular framework for DIN-rail equipment - IP20

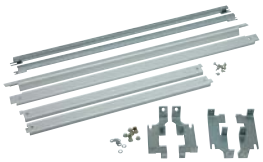

Delivered in kit-form
Content of the kit:
- 2 x support for left vertical profile
- 2 x support for right vertical profile
- 2 x vertical mounting profile
- 2 x insulated vertical cover for IP20
- 2 x insulated horizontal cover for IP20
- all screws and nuts for assembly

2 rows

Description	Ref. No.
40 mod. - HxW = 500x500	**833264**
68 mod. - HxW = 500x750	**833265**

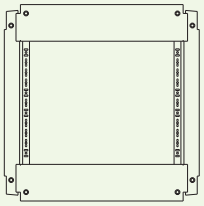

4 rows

Description	Ref. No.
80 mod. - HxW = 750x500	**833266**
136 mod. - HxW = 750x750	**833267**

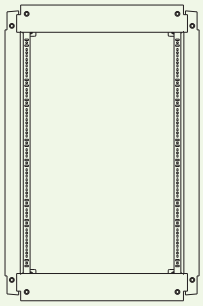

6 rows

Description	Ref. No.
120 mod. - HxW = 1000x500	**833268**
204 mod. - HxW = 1000x750	**833269**

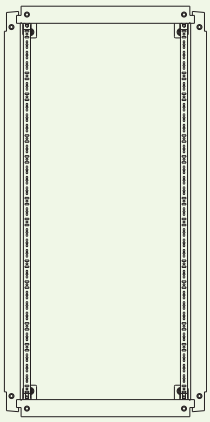

7 rows

Description	Ref. No.
238 mod. - HxW = 1250x750	**833270**

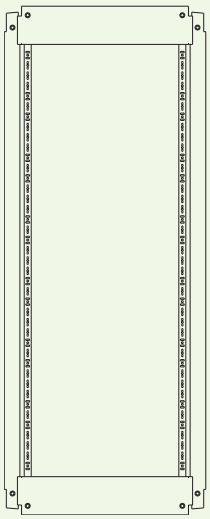

Modular functions and accessoires, see B.29

Modular functions for DIN-rail equipment *(to be mounted on the modular framework)*

Consists of:
- DIN-rail
- coverplate with rectangular cut-out
- accessories for assembly

Centre distance 150 mm			
Height	**Width**	**500 mm**	**750 mm**
150 mm		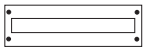	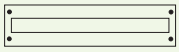
	Modules (1 mod. = 18 mm)	20	34
	Ref. No.	**833272**	**833278**

Modular functions for terminals or other equipment *(to be mounted on the modular framework)*

Consists of:
- DIN-rails
- plain coverplate
- accessories for assembly

Centre distance 150 mm			
Height	**Width**	**500 mm**	**750 mm**
150 mm		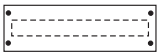	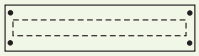
	Ref. No.	**833271**	**833277**
300 mm		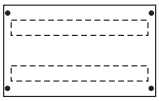	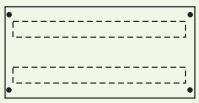
	Ref. No.	**833274**	**833280**

Accessories *(to be mounted on the modular framework)*

Metal mounting plates

833275	1
H x W = 150 x 500 mm	
833281	1
H x W = 150 x 750 mm	
833276	1
H x W = 300 x 500 mm	
833282	1
H x W = 300 x 750 mm	

Depth extension studs for metal mounting plates with 2 screws M5 x 10 (1 set = 2 pieces)

828059	1 set
Length (mm): 20-35-50	
828060	1 set
Length (mm): 25-40-55	
828061	1 set
Length (mm): 30-45-60	
828062	1 set
Length (mm): 65-80-95	
828063	1 set
Length (mm): 70-85-100	
828064	1 set
Length (mm): 75-90-105	
828031	1 set
Length (mm): 110-125-140	

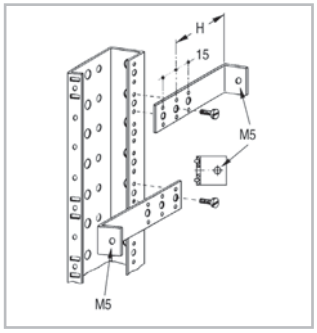

Accessories for Alu mounting frame

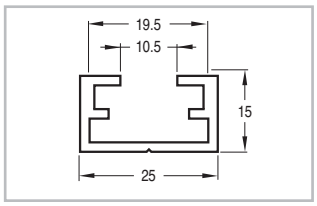

Aluminium profiles (mm)

833537	1	Enclosure width 500 - Profile length 468
833538	1	Enclosure width 750 - Profile length 718
833539	1	Enclosure width 1000 - Profile length 968
833540	1	Enclosure width 1250 - Profile length 1218

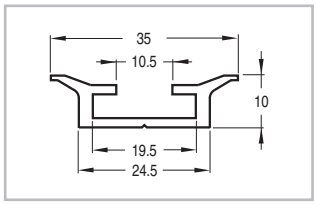

833545	1	Enclosure width 500 - Profile length 468
833546	1	Enclosure width 750 - Profile length 718
833547	1	Enclosure width 1000 - Profile length 968
833548	1	Enclosure width 1250 - Profile length 1218

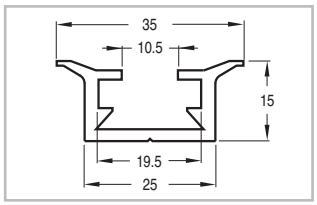

833541	1	Enclosure width 500 - Profile length 468
833542	1	Enclosure width 750 - Profile length 718
833543	1	Enclosure width 1000 - Profile length 968
833544	1	Enclosure width 1250 - Profile length 1218

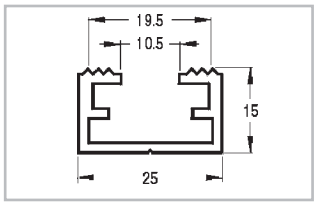

811417	1	Profile length 3000

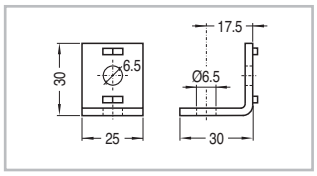

Fixing brackets

811463	100	

Support for studs

811462	100	

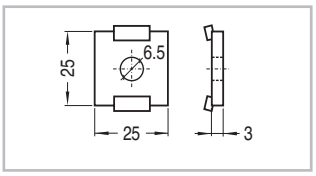

Insulated nut

601225	100	RAL 7035

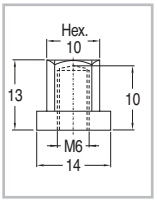

Screws

811483	100	Screw M6 with flange
833655	100	Screw M6 x 12
811451	100	Screw M6 in PVC for coverplate (sealable)

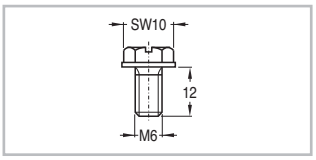

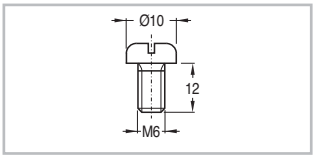

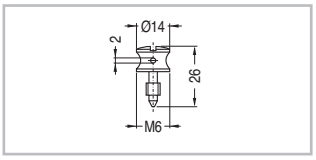

Nuts in metal

811435	100	M6
811438	100	M4
811442	100	M6
811446	100	M6
811447	100	M8

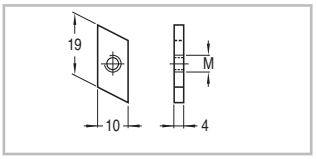

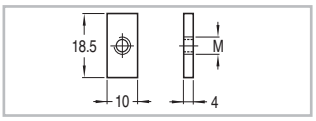

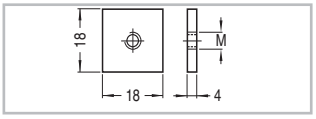

Accessories for Alu mounting frame (continued)

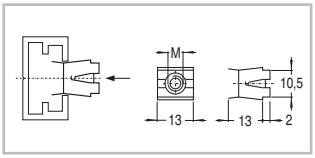

Nuts in PVC

	811443	100
M6		

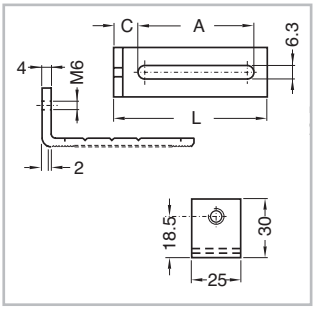

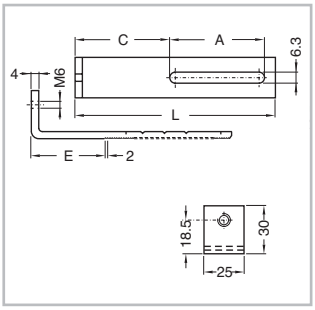

Brackets

	811477	100
L = 25 - A = 10 - C = 9,5		
	811478	100
L = 40 - A = 24 - C = 9,5		
	811479	100
L = 80 - A = 64 - C = 9,5		
	811480	100
L = 120 - A = 64 - C = 49,5 - E = 41,5		

Studs

Type 1 - M4-M6

	811336	100
L = 15		

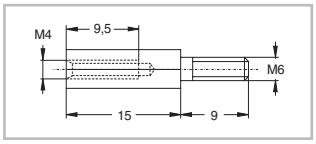

Type 2 - M6-M6

	811337	100
L = 15		
	811338	100
L = 20		
	811454	100
L = 25		
	811339	100
L = 30		
	811455	100
L = 35		
	811456	100
L = 45		
	811457	100
L = 55		
	811458	100
L = 65		
	811340	100
L = 70		
	811460	100
L = 80		
	811461	100
L = 100		
	811341	100
L = 120		

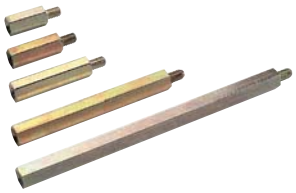

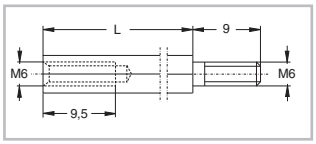

Type 3 - M6-M6

	811342	100
L = 60		
	811343	100
L = 30		

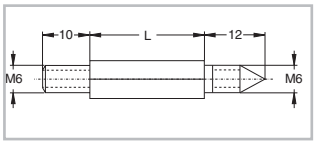

Mounting applications for Alu mounting frame

Continuously adjustable Alu mounting frame

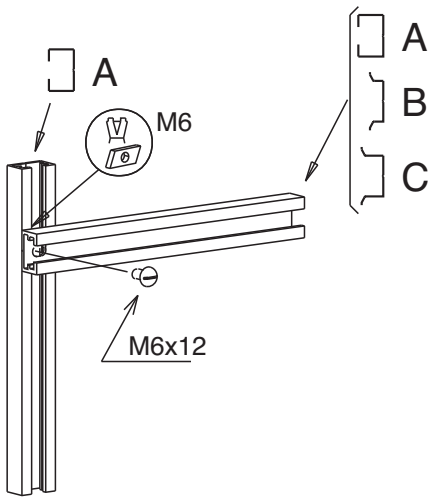

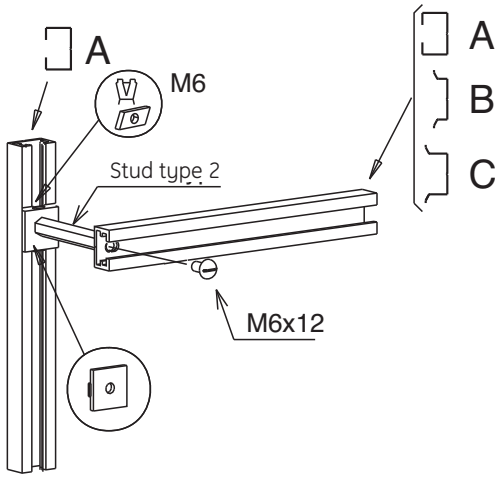

Use of coverplate

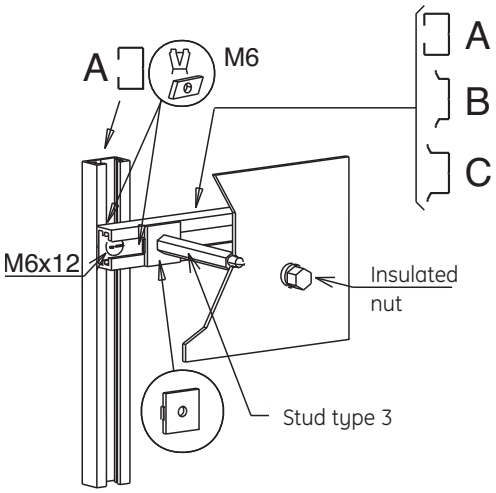

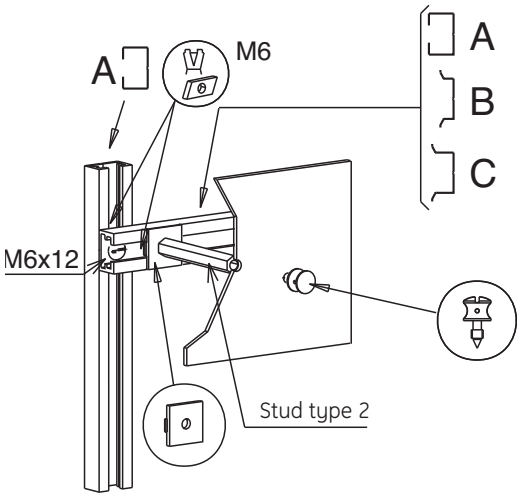

Note:
Same way of mounting for coverplate as mounting plate

Adjustable Alu mounting frame in steps of 12.5 mm

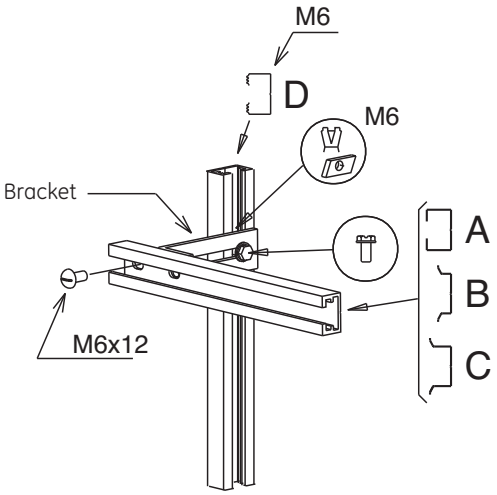

C.3 **VMS** - Modular enclosures system
C.28 **Fix-o-Rail Senior** - Type tested distribution cabinets

Overview wall mounting system enclosures

VMS (Modular) IP65	Fix-o-Rail Senior IP41
320 x 220 x 179	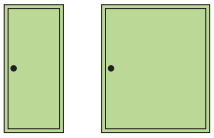 650 x 300 x 210 650 x 550 x 210
320 x 320 x 179	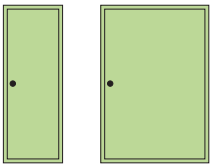 800 x 300 x 210 800 x 550 x 210
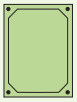 440 x 320 x 179	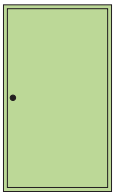 950 x 550 x 210
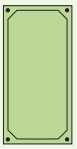 640 x 320 x 179	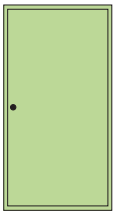 1100 x 550 x 210 1100 x 800 x 210
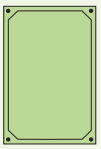 640 x 440 x 179	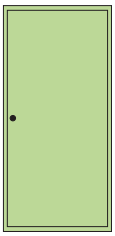 1250 x 550 x 210 1250 x 800 x 210

H x W x D in mm

Modular enclosure system

Applications

- Industry
- Public utilities
- Multi motor panels
- Electronic instrumentation
- Low voltage panelboards

Standards

IEC 60439-1 EN 60439-1
IEC 60529 EN 60529
IEC 62208 EN 62208
DIN VDE 0660 - Teil 500
BS 5486 Part 1

Approvals

- Single boxes: types 2, 3, 3R, 3S, 5, 12 and 12K
- Modular system: types 2, 3, 3R, 3S, 5, 12 and 12K available on request
- Modular system using 853063: types 2 and 3R
- Boxes with internal hinged cover: types 2, 5, 12 and 12K
- Boxes with external hinges: type 2 available on request

Overview of the range ● Page C.2
Dimensional drawings ● Page I.24
Specifications for tender documents ● Page I.54
Power dissipation values ● Page I.72

Features

- The range consists of five boxes based on a 100 mm module.
- The innovative coupling concept allows easy, rapid assembly of any combination of units without the need for tools.
- The open bases offer excellent accessebility and wiring space for installation, mounting and cable connection, even after coupling.
- The side panel openings can be closed by either blind or combi end plates. Once mounted, end plates fit perfectly flush with the side panels of the base.
- Each large box is a multiple of a smaller one. Its fixing points in increments of 25 mm in bottom plate and top end are also a multiple of those of a small box.
- The base and end plates are made of light grey (RAL 7035) glassfiber reinforced polycarbonate. The cover is made of either transparent or opaque light grey (RAL 7035) polycarbonate.
- A multiple of accessories like mounting plates, cover plates, depth extension frame, ... makes the VMS a complete system for electrical distribution and control applications.
- VMS boxes are halogen-free.
- VMS boxes provide optimum security to both operations and equipment because they feature total insulation ⧈ and protection degree IP65 according to EN/IEC 60529.

Coupling system

The enclosures are coupled by means of vertical dowels, inserted into the corner shafts. These dowels are universal to all sizes.

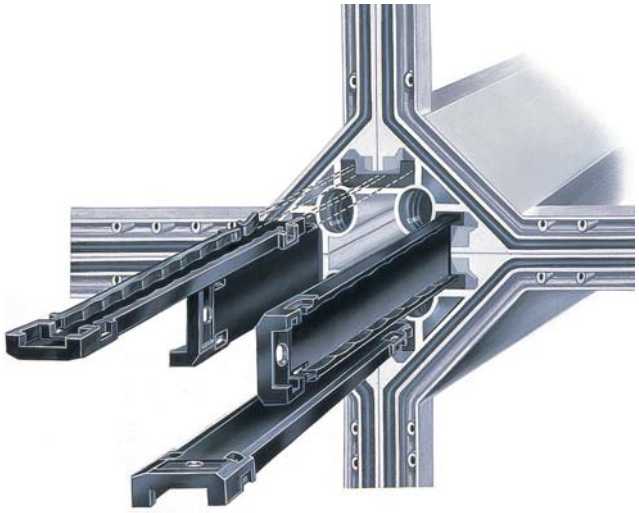

End-plates installation

End-plates, combi or blind, are snapped on from the outside and fixed by means of vertically inserted dowels.

Modular insulated enclosures system

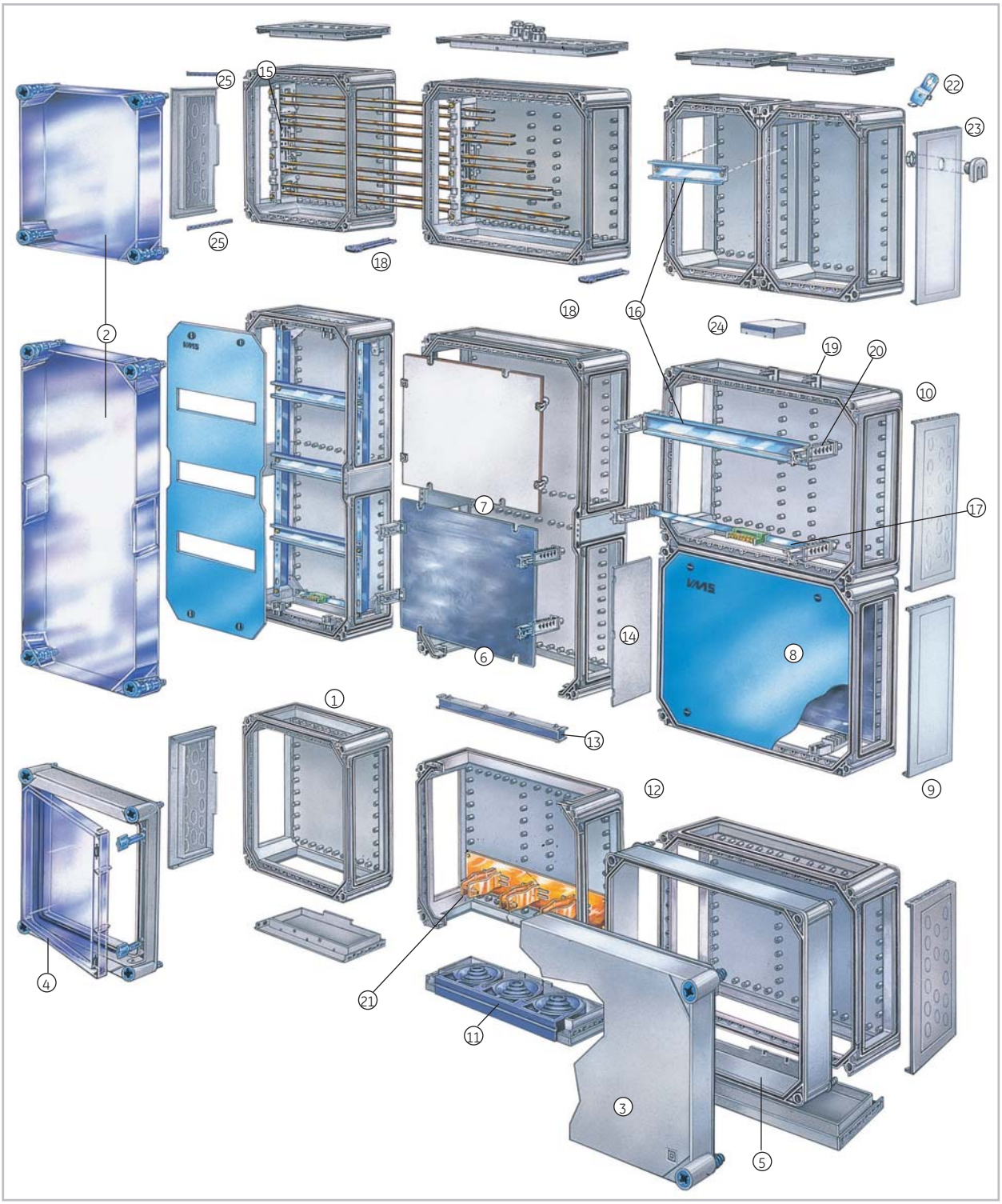

1. Base
2. Transparent cover
3. Opaque cover
4. Hinged cover
5. Depth extension frame
6. Mounting plate in metal
7. Mounting plate in pertinax
8. Blind cover plate
9. Blind end-plate
10. Combi end-plate
11. Cable end-plate
12. Cable stress release
13. Bridge
14. Partition plate
15. Busbar support
16. DIN-profile
17. Mounting rail 12 x 2 mm
18. Coupling dowels
19. Coupling clamp
20. Universal support
21. Stress relieving cable clamp
22. Fixing bracket
23. Air vent
24. Coupling set 2 x 220 mm
25. Locking key

Technical specifications

Protection degree according to IEC 60529	
individual and coupled	IP65
with coupling set 2 x 220	IP44
with extension frame	IP65
with cable entries	IP43
with bridges	IP55
Protection degree against external mechanical impacts according to EN 62262 and IEC 62262	
base + end plates + covers	IK08
hinged cover	IK07
Materials	
bases + end plates	reinforced fibre-glass polycarbonate
covers	polycarbonate
cover screws	polyamide
gaskets	PUR, neoprene
Temperature resistance	
materials	see page I.6
continuous use	-20°C up to +80°C
Colours	
bases + end plates	RAL 7035
covers	RAL 7035 / transp.
Protection	Total isolation ⧈
Rated voltage	690VAC / 800VDC
Rated insulation voltage	690VAC
Rated current	max. 1250A
Rated short time withstand current	max. 30kA (0.3 s.)
Rated peak short-circuit current	max. 65kA peak
Standards	EN 60439-1 DIN VDE 0660 - T 500 BS 5486 Part 1 IEC 60439-1

Recommended configuration for optimal modularity

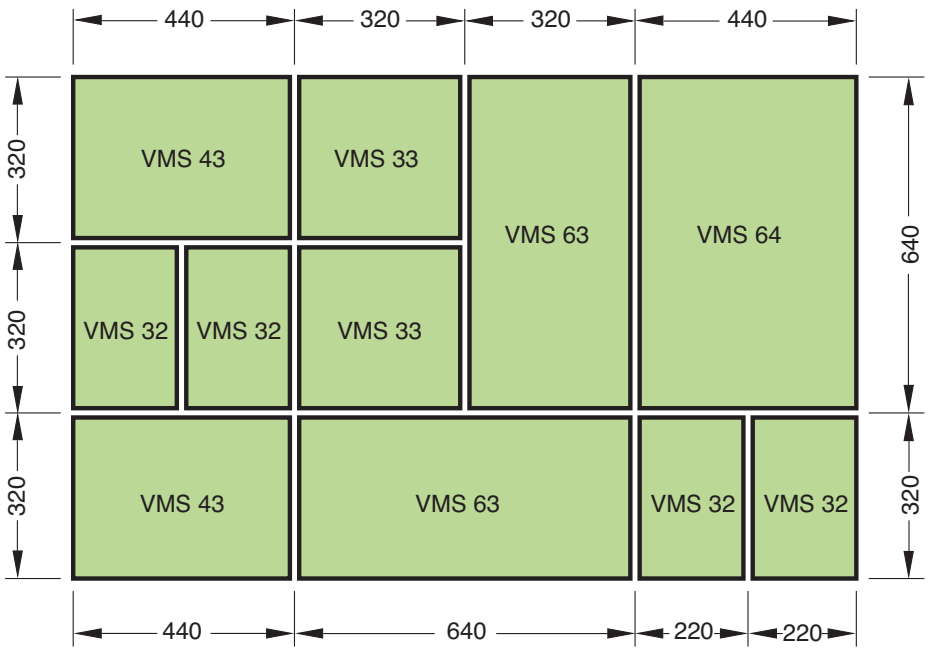

Features and Benefits

Modular dimensions in increments of 100 mm in height and width, available in five sizes:

320 x 220 mm
320 x 320 mm
440 x 320 mm
640 x 320 mm
640 x 440 mm

Assorted covers: transparent, opaque, or hinged, common design and depth.

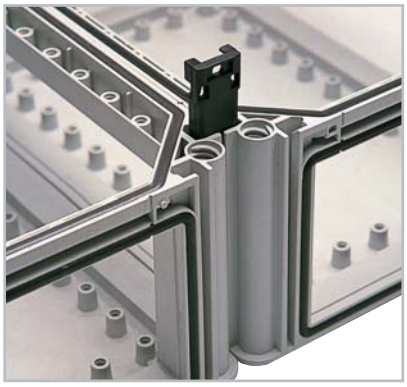

Time saving coupling by means of vertical dowels, inserted into corner slots.

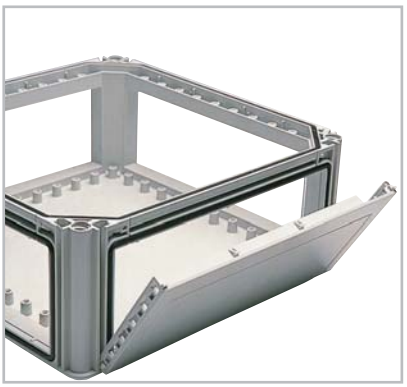

End-plates, combi or blind, are snapped on from the outside and fixed by means of vertically sunk keys.

Once mounted, end-plates fit perfectly flush with the side panels of the base.

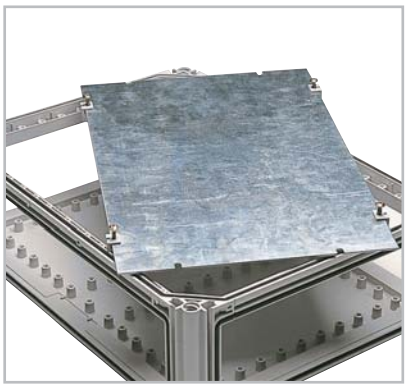

Rectangular mounting plates (2 mm in metal or 5 mm in laminated pertinax) with mounting set. Usable mounting depth is maximised and not dependant on plate thickness.

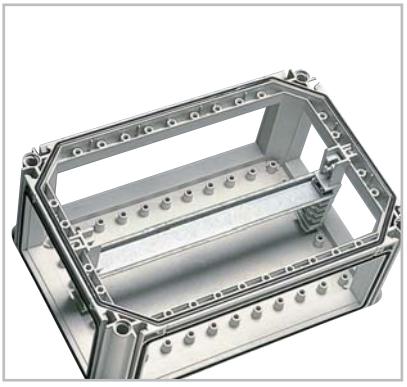

Universal support for screwless and depth adjustable installation of component rails.
The support is simply clicked over the base.

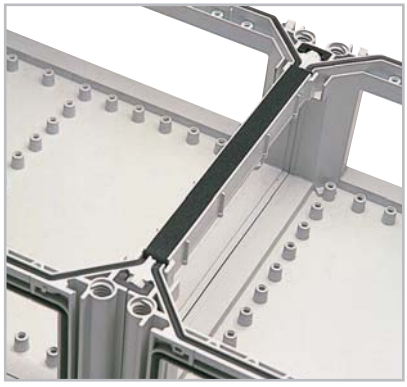

Bridges are inserted after connection of cables (320 and 440 mm sides).

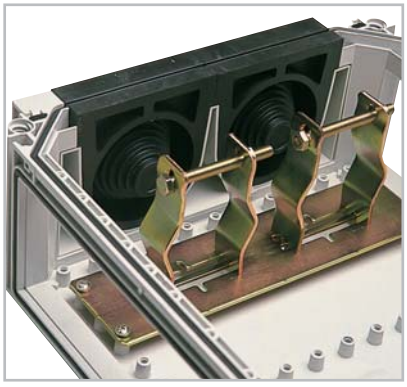

Universal cable entries and stress relieving cable clamps for cables up to Ø 75 mm can be located in any base on side 320 mm (for two cables) or on side 440 mm (for three cables).

Modular system components

	Type	VMS 32	VMS 33	VMS 43	VMS 63	VMS 64
Base With four open sides	H x W x D	320 x 220 x 130	320 x 320 x 130	440 x 320 x 130	640 x 320 x 130	640 x 440 x 130
	Ref. No.	**853000**	**853001**	**853002**	**853003**	**853004**
	Pack.	4	2	2	1	1
Transparent cover With slotted screws	H x W x D	320 x 220 x 50	320 x 320 x 50	440 x 320 x 50	640 x 320 x 50	640 x 440 x 50
	Ref. No.	**853005**	**853006**	**853007**	**853008**	**853009**
	Pack.	4	2	2	1	1
Opaque cover With slotted screws	H x W x D	320 x 220 x 50	320 x 320 x 50	440 x 320 x 50	640 x 320 x 50	640 x 440 x 50
	Ref. No.	**853010**	**853011**	**853012**	**853013**	**853014**
	Pack.	4	2	2	1	1
Hinged cover With double closure system 215° opening angle	H x W x D		320 x 320 x 50	440 x 320 x 50		
	Ref. No.	–	**853015**	**853016**	-	-
	Pack.		2	2		
Depth extension frame With fixing screws	H x W x D	320 x 220 x 75	320 x 320 x 75	440 x 320 x 75	640 x 320 x 75	640 x 440 x 75
	Ref. No.	**853030**	**853031**	**853032**	**853033**	**853034**
	Pack.	4	2	2	1	1
Mounting plate Metal, 2 mm With mounting set	H x W	260 x 160	260 x 260	380 x 260	580 x 260	580 x 380
	Ref. No.	**853068**	**853069**	**853070**	**853071**	**853072**
Pertinax, 5 mm With mounting set	H x W	260 x 160	260 x 260	380 x 260	580 x 160	580 x 380
	Ref. No.	**853113**	**853114**	**853115**	**853116**	**853117**
	Pack.	1-10	1-10	1-10	1-10	1-10
Plain cover plate Grey Blue Insulated material, 2 mm With mounting set	H x W	301 x 201	301 x 301	421 x 301	621 x 301	621 x 421
	Ref. No.	**855009**	**855010**	**855011**	**855012**	**855013**
	Ref. No.	**853103**	**853104**	**853105**	**853106**	**853107**
	Pack.	1-10	1-10	1-10	1-10	1-10

Accessories

Combi end-plates

Side (mm)	Characteristics Metric	Ref. No.	Pack.
220	3 x M32/M25 + 3 x M20	855029	1/10
220	1 x M50/M40 + 4 x M25/M20	855030	1/10
320	3 x M50/M40 + 4 x M16	855032	1/10
320	17 x M20	855033	1/10
320	1 x M50/M40 + 2 x M32/M25 + 4 x M25/M20	855034	1/10
320	12 x M25/M20	855035	1/10
320	4 x M40/M32 + 3 x M20	855036	1/10
440	1 x M40/M32 + 16 x M25/M20	855037	1/10
440	1 x M50/M40 + 2 x M40/M32 + 8 x M25/M20	855038	1/10

Blind end-plates

Side (mm)		
220	853017	1/10
320	853020	1/10
440	853027	1/10

Cable entries

Side (mm)		
320	853082	1/5
Ø max. of cable: 2 x 75 mm		
440	853083	1/5
Ø max. of cable: 3 x 75 mm		

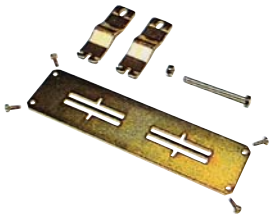

Cable stress release

Side (mm)		
320	853036	1/5
440	853037	1/5

With one clamp

Ø max. of cable: 75 mm

Cable clamp

To mount on cable stress release

	853035	1

Ø max. of cable: 75 mm

Bridges

Side (mm)		
320	853073	1
440	853074	1

For large cross-section cables

Coupling key

	853059	20

For base coupling

Locking pin

	853055	10

For cable end-plates (spare part)

Coupling set 2 x 220

	853063	1

To couple 2 sides of 220 mm to one side of 440 mm

With mounting accessories

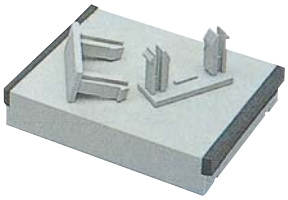

Coupling clamp

	853062	10

For coupling in special cases

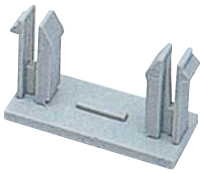

Universal support

	853060	10

To fit:
- mounting plates (metal or synthetic)
- cover plates
- copper rail 15 x 3
- copper rail 9 x 6.5
- mounting rail 12 x 2 mm

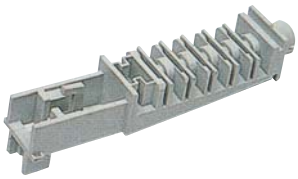

Accessories (continued)

Universal support

Side 320 mm	**855084**	1

To fit:
- mounting plates (metal or pertinax)
- cover plates
- DIN-rails
- copper rail 15 x 3
- copper rail 12x5/10
- mounting rail 12 x 2 mm

Fixation screws to be used: 853100 (5x13)

Symmetrical DIN-profiles

Side (mm)		
220	**853094**	1
320	**853095**	1
440	**853096**	1
640	**853269**	1

Always supplied with two universal supports

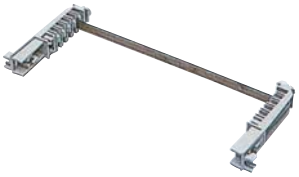

Mounting rail 12 x 2 mm

Side (mm)		
220	**853097**	1
320	**853098**	1
440	**853099**	1

To fit connection terminal blocks

Always supplied with two universal supports

Branch terminals, see p. H.4

Partition plates

Side (mm)		
220	**853065**	1
320	**853066**	1
440	**853067**	1

For full compartimentalisation of coupled bases

Wall fixing brackets

	853064	1

Set of four brackets with screws
- Stainless steel
- For external fixing points
- Direct fitting through the corner shafts of the base
- To be installed prior to extension frame or hinge installation
- Three optional mounting positions (0°, 45°, 90°)

Air vent - IP45

	853123	1

Install two air vents per enclosure to allow ventilation and prevent condensation. Set of 2 pieces.

Cover screw

	853057	1

Set of 4 pieces

Hinge screw

	853061	1

Base must be fixed prior to hinge installation

Set of 2 pieces.

Hinges

	853340	1

In order to enable hinge mounting, holes must be drilled in the cover and in the base. Templates for drilling are supplied with each set. Each set consists of two hinges, screws, a drilling template, the mounting instructions and spacer shims.

Set of 2 pieces.

Thumb grip

	853058	1

For cover screw or hinge screw.

Set of 4 pieces.

Self-tapping screws

5 x 13	**853100**	50
5 x 16	**853101**	50
5 x 22	**853102**	50

For fixation in the base.

6 x 16	**851384**	500
6 x 22	**851385**	500

To fasten components to metallic mounting plates.

Blanking plate

	828056	1m

For 45 mm cut-out

Marking strip

	851321	1m

Self-adhesive

Accessories (continued)

Screws for depth extension frame

853056	4

As replacement

Fixation set for mounting plate

853054	1

As replacement, for steel or Pertinax

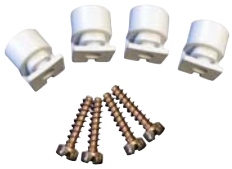

Fixation set for cover plate

853053	1

As replacement

Blanking plate

610142	4

For 4 modules

610484	500

For 4 modules

Pre-assembled units for panelboards

Type	VMS 32	VMS 33	VMS 43	VMS 63	VMS 64
Enclosures for DIN-rail equipment Without cover and end plates for assembly of modular devices Includes: - base with 4 open sides - mounting frame with earth-rail and cover plate - including PE terminal DIN-rail distance 125 mm	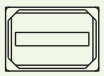	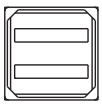	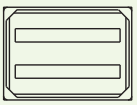 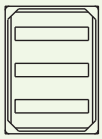	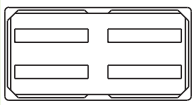 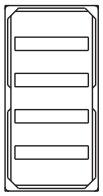	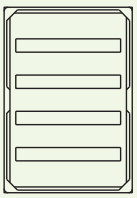
	320 x 220	320 x 320	320 x 440 (horizontal)	320 x 640 (horizontal)	640 x 440
	14 modules **853125**	28 modules **853127**	40 modules **853266**	56 modules **853267**	80 modules **853268**
			440 x 320 (vertical)	640 x 320 (vertical)	
			42 modules **853129**	56 modules **853131**	
  Enclosures for DIN-rail equipment Includes: - base with four open sides - base frame with earth bar and coverplate - transparent hinged cover (VMS 33 - VMS 43) - transparent cover with screws (VMS 32 - VMS 63)		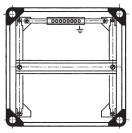	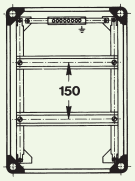	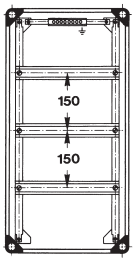	
	320 x 220 x 179	320 x 320 x 179	440 x 320 x 179	640 x 320 x 179	
	14 modules **853124**	14 modules **853126**	28 modules **853128**	42 modules **853130**	
  Enclosures for DIN-rail equipment including end-plates Includes: - base with four closed sides - with combi end plates: top: 17 x M20 bottom: 1 x M50/40 + 2 x M40/32 + 8 x 25/20 side: plain - bare frame with earth connector and cover plate - transparent pivoting cover (VMS 43) - transparent cover with screws (VMS 32 - VMS 63)	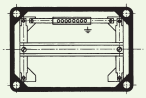		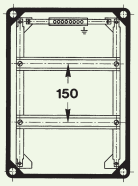	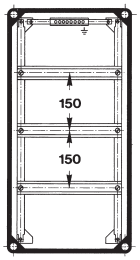	
	320 x 220 x 179		440 x 320 x 179	640 x 320 x 179	
	14 modules **853159**		28 modules **853160**	42 modules **853161**	

Pre-assembled units for panelboards

Type	VMS 32	VMS 43	VMS 63	VMS 64
	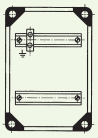	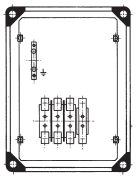		
Enclosures for loadbreak switches (Dilos) and fuse bases				
	320 x 220 x 179	440 x 320 x 179		
Includes: - base with four open sides - transparent cover with handle opening and screws - extension shaft and operating handle - for VMS 32:two DIN-rails with earthing (without equipment) - for VMS 43 and VMS 63: mounting plate with threaded holes for loadbreak switches, fuse bases and earthing connectors	DILOS 1 40/63/80A 3P/4P + ⏚ E27 / E33 MCB **853140**	DILOS 1 63/80/100/125A 3P/4P + ⏚ 3 DIN 00 + N **853141**		
		DILOS 2 160A 3P/4P + ⏚ 3 DIN 00 + N **853170**		
Miniature circuit breakers, loadbreak switches and fuses are to be ordered separately				
			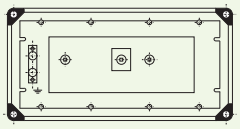	
Enclosures for changeover switches (Dilos/Fulos)				
			640 x 320 x 179	
Includes: - base with four open sides - mounting plate with change-over system (I-O-II) and earth bar - transparent cover with handle opening and screws - extension shaft and operating handle			DILOS 1H 125A 3P/4P + ⏚ **853876**	
			FULOS 000 32/63/100A 3P/4P + ⏚ **853877**	
				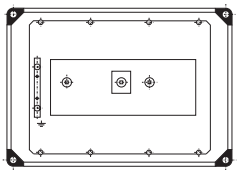
				640 x 440 x 179
				DILOS 3 160/200/250/315A 3P/4P + ⏚ **853878**
Dilos and Fulos switches are to be ordered separately				FULOS 00 160A 3P/4P + ⏚ **853879**

Pre-assembled units for panelboards

Type	VMS 32	VMS 33	VMS 43	VMS 63	VMS 64
			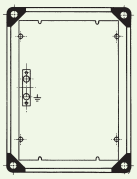	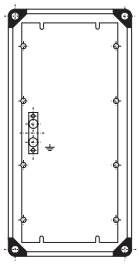	
Enclosures for MCCB's type Record Plus[1]			440 x 320 x 254	640 x 320 x 254	
Includes: - base with four open sides - mounting plate with threaded holes and earth connector - transparent cover with operating handle for moulded case circuit breakers - transparent cover with operating handle and push-buttons for moulded case circuit breakers with earth-leakage device			FD160 (+RCD) 3P/4P F **855085**	FE160 +RCD 3P/4P F **855088**	
			FE160 3P/4P F **855087**	FE250 + RCD 3P/4P F **855088**	
			FE250 3P/4P F **855087**		
The use of short or long terminal covers for the breaker is mandatory. **Breaker and terminal covers always have to be ordered separately.**					
	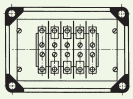	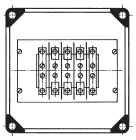	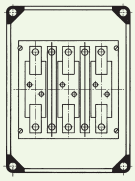		
	320 x 220 x 179	320 x 320 x 179	440 x 320 x 179		
Enclosures with H.R.C. fuse plates	125A 3 DIN 00 + N + ⏚ **853132**	125A 3 DIN 00 + N + ⏚ **853133**	250A 3 DIN 1 + N + ⏚ **853134**[1]		
Includes: - base with four open sides - mounting plate with H.R.C. bases - transparent cover with screws			400A 3 DIN 2 + N + ⏚ **853135**[1]		
Fuses are to be ordered separately			630A 3 DIN 3 + N + ⏚ **853136**[2]		

(1) Short-circuit resistance 20kA eff. at 440V
(2) To the functional units DIN 1/2/3 the mounting plate can be rotated 90°, in the way that the enclosure can be coupled with the units DILOS 4 - FULOS 1/2 (side 440).

Pre-assembled individual units

Type	VMS 32	VMS 33	VMS 43	VMS 64
	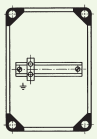	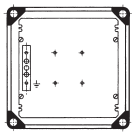	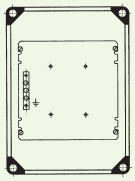	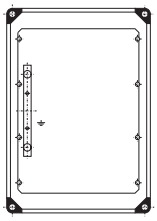
Enclosures for loadbreak switches and fused disconnector loadbreak switches (Dilos/Fulos)	320 x 220 x 179	320 x 320 x 179	440 x 320 x 179	640 x 440 x 179
Includes: - base with four open sides - DIN rail with earthing connector (VMS 32) - mounting plate with threaded holes and earthing connector (VMS 33 - VMS 43) - transparent cover with handle cut out and with screws - extension shaft and operating handle	DILOS 1 40/63/80/100/125A 3P/4P + ⏚ **853137**	DILOS 2 160/200A 3P/4P + ⏚ **853138**	DILOS 3 160/200/250/315A 3P/4P + ⏚ **853139**	DILOS 4 400/500/630A 3P/4P + ⏚ **853875**
		DILOS 1H 3P/4P + ⏚ 40/63/125A **853874**		FULOS 1 250A 3P/4P + ⏚ **853875**
Loadbreak switches and fused disconnector loadbreak switches are to be ordered separately		FULOS 000 32/63/100A 3P/4P + ⏚ **853874**	FULOS 00 160A 3P/4P + ⏚ **853139**	FULOS 2 400A 3P/4P + ⏚ **853875**

Type	VMS 32	VMS 33	VMS 43	VMS 64
	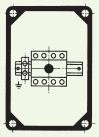	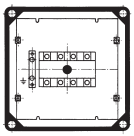		
Enclosures with loadbreak switches (Dilos)	320 x 220 x 179	320 x 320 x 179		
Includes: - base with four closed sides - with combi end plates: top: side 220: 1xM50/M40 4xM25/M20 side 320: 1xM50/M40 2xM32/M25 4xM25/M20 bottom: side 220: 3xM32M25 2xM20 side 320: 3xM50/M40 4xM16 - four pole loadbreak switch 660V - transparent cover and screws - extension shaft and operating handle	DILOS 1 63A - 4P + ⏚ **853162**	DILOS 2 160A - 4P + ⏚ **853164**		
	DILOS 1 125A - 4P + ⏚ **853163**			

	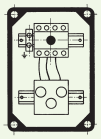		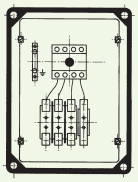	
	320 x 220 x 179		440 x 320 x 179	
Enclosures with loadbreak switches (Dilos) and fuse bases	DILOS 1 63A - 4P + ⏚ 3 fuse screw holders E33 **853165**		DILOS 1 63A - 4P + ⏚ 3 DIN 00 + N **853166**	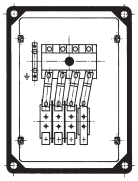
Includes: - base with four closed sides - with combi end plates: top: side 220: 1xM50/M40 4xM25/M20 side 320: 1xM50/M40 2xM32/M25 4xM25/M20 bottom: side 220: 3xM32M25 2xM20 side 320: 3xM50/M40 4xM16 - four pole loadbreak switch 660V - partition plates between adjacent bases - transparent cover and screws - extension shaft and operating handle			DILOS 1 125A - 4P + ⏚ 3 DIN 00 + N **853167**	
			DILOS 2 160A - 4P + ⏚ 3 DIN 00 + N **853168**	

Supporting frame

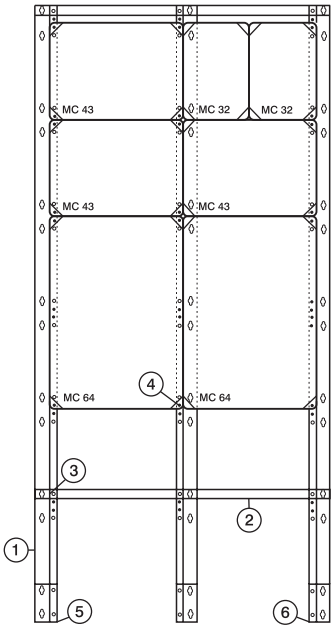

Accessories

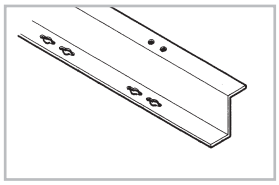

(1) **Vertical Z-profile - RAL 9001**

853866	1	Aluzink - L = 2360 mm, for 6 x 320
853867	1	Aluzink - L = 2040 mm, for 5 x 320
853868	1	Aluzink - L = 1080 mm, for 3 x 320
853869	1	Aluzink - L = 760 mm, for 2 x 320

Fixation bracket

853870	1	For connection of vertical with horizontal profile	(3)

Screw

853871	50	M5 x 16 DIN 7500-C - TORX	(4)

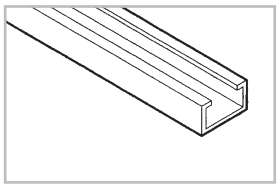

(2) **Horizontal - C-profile**

853865	1	Length = 2500 mm
870384	1	Length = 6000 mm

Stand support

853872	1	Left	(5)
853873	1	Right	(6)

Supporting frame

- Wall mounting of small units can be made using stainless steel fixing brackets (see chapter J). For mounting and handling of units of more than five enclosures, a supporting frame is compulsory.
- The supporting frame consists of at least two horizontal C-profiles (= the length of the assembly width) and a number of two vertical C-profiles (equal to the number of vertical sections +1).
- If the unit height is greater than 1000 mm, three horizontal C-profiles will be used.
- The vertical C-profiles are 140 mm longer than the height of the assembled panel.
- The frame and the enclosure assembly should be mounted simultaneously.

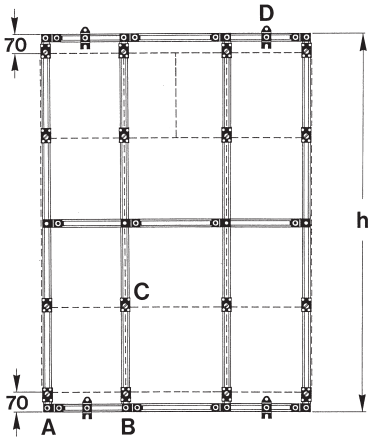

Accessories

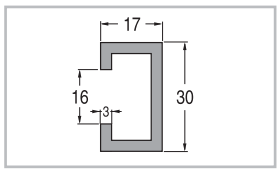

Aluminium C-profile

851254	1

30 x 17 x 3 mm

Length = 3 m

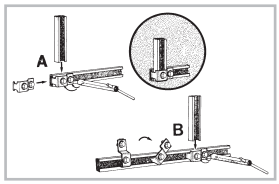

Frame clamping brackets

851253	10

Complete with 2 bolts and 2 M8 sliding nuts. For clamping top and bottom horizontal C-profiles to vertical profiles.

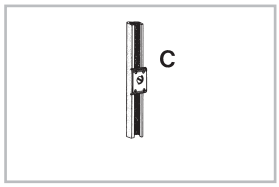

Clamping plate

851415	10

Complete with screw and M8 sliding nut. For fitting the enclosures onto vertical C-profiles of the frame.

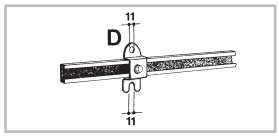

Wall mounting bracket

851249	10

Bolt M6 x 12 DIN 84

853256	50

To fit clamping plate on the enclosure

Horizontal and vertical C-profiles of the first row of enclosures are assembled together by clamping brackets and sliding nuts. The next clamping brackets are mounted on the horizontal profile.

The first row of enclosures is then mounted on the vertical profiles with the clamping plates.

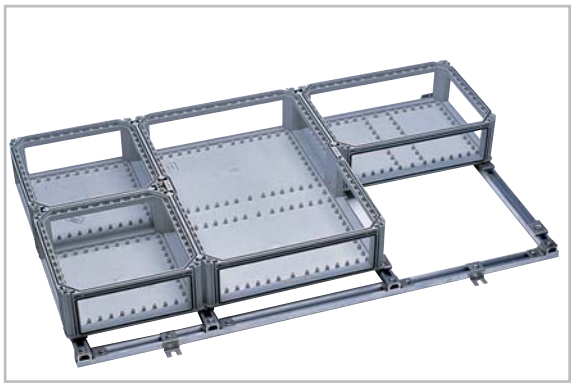

Following rows are then assembled the same way.

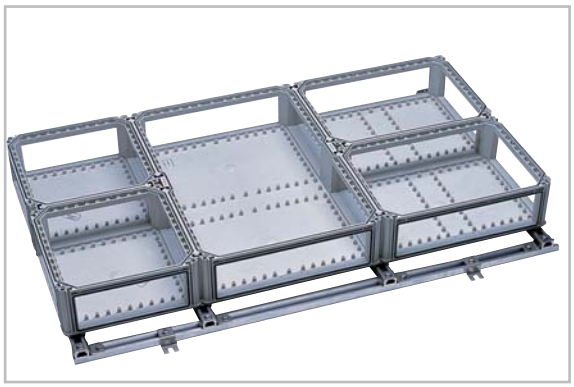

Frame and enclosure assemblies are mounted simultaneously.

Notes

Busbar system

Universal busbar system 125A-1250A
KEMA approved according to EN 60439-1

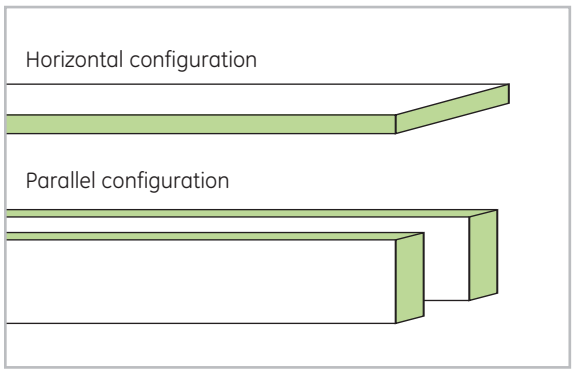

Accessories

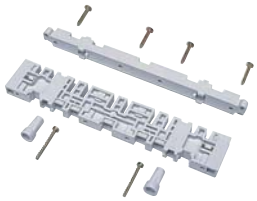

853075	10
Horizontal configuration 125A/250A	
Parallel arrangement 250A	

853077	10
Parallel arrangement 630A/1250A	

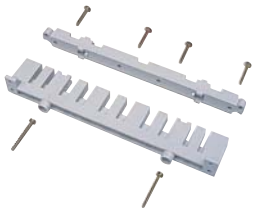

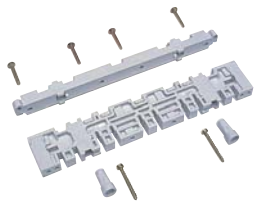

853076	10
Horizontal configuration 125A/250A	
Parallel arrangement 400A	

828322	10
Horizontal configuration 160A/630A	

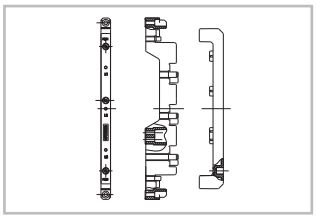

Busbar system 125A-1250A

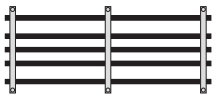

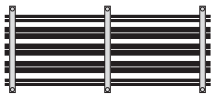

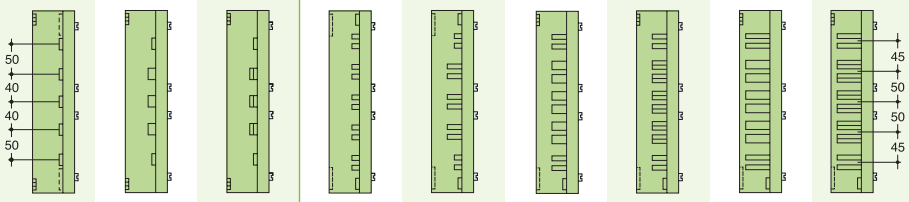

	Horizontal configuration			Parallel arrangement					
Rated nominal current In	**125/160A**	**250A**	**250A**	**250A**	**400A**	**630A**	**630A**	**1250A**	**1250A**
Busbar supports									
Ref. No.	**853075**	**853075**	**853075**	**853075**	**853076**	**853077**	**853077**	**853077**	**853077**
Pack	1	1	1	1	1	1	1	1	1
Centre distance of phase bars (mm)	40	40	40	50	50	50	50	50	50
Distance between N or ⏚ - bar and adjacent phase bar (mm)	50	50	50	45	45	45	45	45	45
Busbars									
Ref. No. for phase bar	**858034**	**858035**	**858034**	**858034**	**858036**	**858037**	**858036**	**858039**	**858038**
Ref. No. for bars N - ⏚	**858034**	**858034**	**858034**	**858034**	**858034**	**858036**	**858036**	**858038**	**858038**
Pack for length 3 m	1	1	1	1	1	1	1	1	1
Number and dimensions of phase bars (L1 - L2 - L3)	1 x (12 x 5)	1 x (12 x 10)	2 x (12 x 5)	2 x (12 x 5)	2 x (20 x 5)	2 x (20 x 10)	4 x (20 x 5)	2 x (30 x 10)	4 x (30 x 5)
Number and dimensions of bars N - ⏚	1 x (12 x 5)	1 x (12 x 5)	1 x (12 x 5)	2 x (12 x 5)	2 x (12 x 5)	2 x (20 x 5)	2 x (20 x 5)	2 x (30 x 5)	2 x (30 x 5)
Total phase section (mm^2)	60	120	120	120	200	400	400	600	600
Total section N - ⏚ (mm^2)	60	60	60	120	120	200	200	300	300
Characteristics									
Centre distance of busbar supports (mm)	320	320	320	320	320	320/290	320/290	320	320
Dynamic short-circuit resistance (kA peak)	40	40	40	30	42	43/54	40/52.5	53	52.5
Thermal short-circuit resistance (kA eff.)	20	20	20	15	20	20/26	20/25	25	25

Horizontal configuration

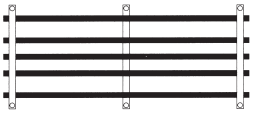

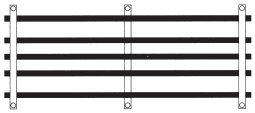

Connection with flat copper

Branching bar width (mm)	Main bar width (mm)	Total thickness of clamped bars (mm) Min.	Max.	Clamp		
12	12	5	15		**851125**	10
15-20-30	12	5	25		**858025**	10

Connection with cable directly on copper 12 x 5 / 12 x 10

Cable clamp			Main bar	Cable section (mm^2) Min.	Max.	Clamp width (mm)
	858026	20	5	1.5	16	11.5
	858028	10	5	1.5	35	15.5
	858032	10	5	16	70	20.5
	858033	10	5	16	120	23.5
	858027	20	10	1.5	16	11.5
	858029	10	10	1.5	35	15.5
	858030	10	10	16	70	20.5
	858031	10	10	16	120	30.5

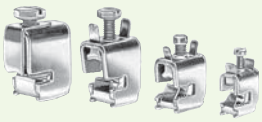

Busbar system 200A-630A

Horizontal configuration

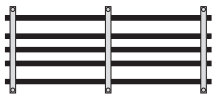

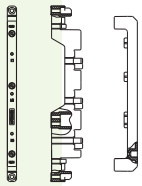

Rated nominal current In	**200A**	**230A**	**300A**	**450A**	**400A**	**630A**
Busbar supports						
Ref. No.	**828322**	**828322**	**828322**	**828322**	**828322**	**828322**
Pack	1	1	1	1	1	1
Centre distance of phase bars (mm)	60	60	60	60	60	60
Distance between N or ⏚ - bar and adjacent phase bar (mm)	38/55	38/55	38/55	38/55	38/55	38/55
Busbars						
Ref. No. for phase bar	**858034**	**858035**	**858036**	**858037**	**858038**	**858039**
Pack for length 3 m	1	1	1	1	1	1
Number and dimensions of phase bars (L1 - L2 - L3)	12 x 5	12 x 10	20 x 5	20 x 10	30 x 5	30 x 10
Number and dimensions of bars N - ⏚	12 x 5	12 x 10	12 x 5	20 x 10	20 x 5	20 x 10
Total phase section (mm^2)	60	120	100	200	150	300
Total section N - ⏚ (mm^2)	60	120	100	200	100	200
Characteristics						
Centre distance of busbar supports (mm)	250	250	250	250	250	250
Dynamic short-circuit resistance (kA peak)	48	42	42	48	48	63

Accessories

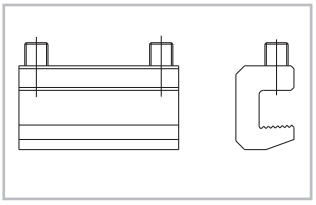

Busbar connector

Enclosure-Enclosure

783267	1

Up to 630A

Parallel arrangement

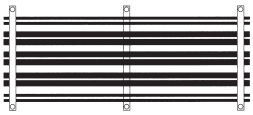

Connection with flat copper or cable-shoe to bars

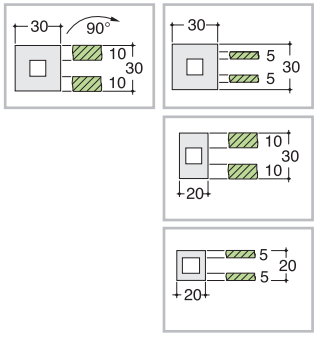

Connecting block

For flat copper with widths 25, 30 or 40

	858003	10

For flat copper with widths 20 or 25

	858004	10

For flat copper with widths 15 or 20

	858005	10

+

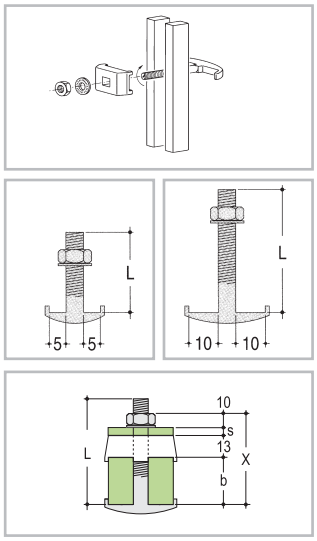

Bolts

For 5 mm thick bars

M10 x 60	**858008**	10
M10 x 80	**858010**	10

For 10 mm thick bars

M10 x 60	**858013**	10
M10 x 80	**858011**	10

b	s	x	L
12	5	40	60
12	10	45	60
20	5	48	60
20	10	53	60
30	5	58	60
30	10	63	80

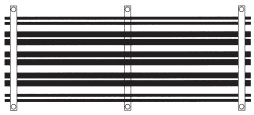

Connection for cables - 16-35-70-120 mm2 to bars

Wing contactblocks

	858006	10
	858007	10

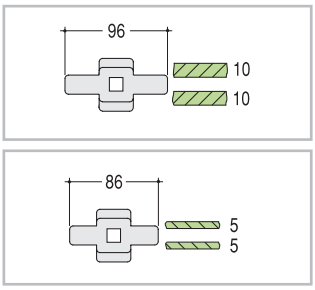

+

Bolts

For 5 mm thick bars

M10 x 60	**858008**	10
M10 x 80	**858010**	10

For 10 mm thick bars

M10 x 60	**858013**	10
M10 x 80	**858011**	10

b	s	x	L
12	-	42	60
12	5	47	60
12	10	52	60
20	-	50	60
20	5	55	60
20	10	60	60
30	-	60	60
30	5	65	80
30	10	70	80

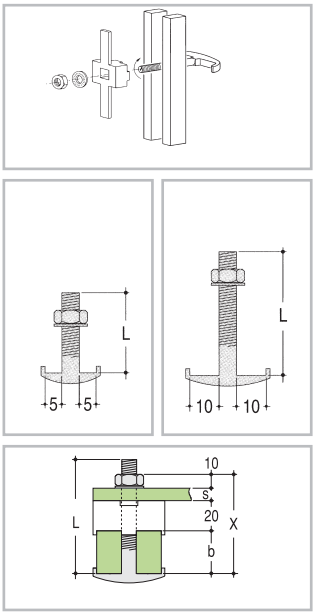

+

Cable clamps for mounting on to wing contactblocks		Cable section (mm²) Min.	Cable section (mm²) Max.	Clamp width X (mm)
858026	20	1.5	16	11.5
858028	10	1.5	35	15.5
858032	10	16	70	20.5
858033	10	16	120	23.5

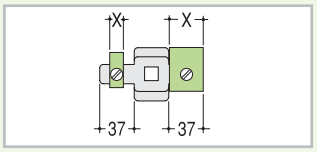

Legend
b: height of the rectangular bars
s: height of the horizontal, rectangular bars or of the connection with cables or flat copper
x: minimal required bolt length
L: length of the fitting hookbolt

Mounting instructions

Coupling of the bases

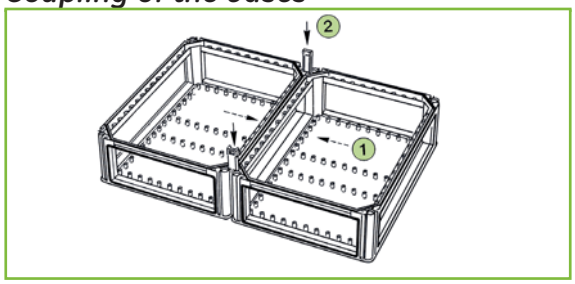

① Set the two bases against each other
② Couple with dowels, insert them simultaneously

Coupling of two 220 mm bases to one 440 mm base

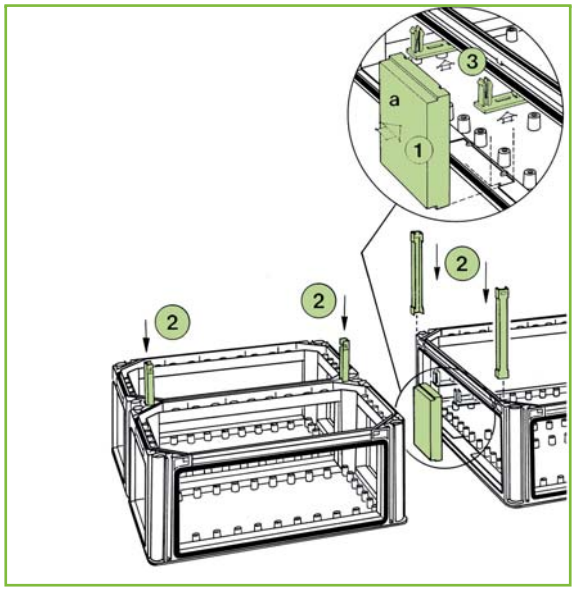

① Install the bridge (a) in the 440 mm side.
Exact location is defined by the slots
② Couple the bases with the four dowels, insert them simultaneously
③ Snap coupling clamps in the openings below the upper base lip

Cover installation

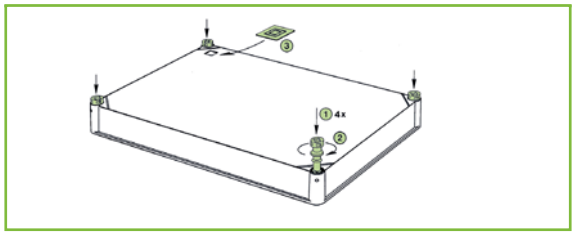

① Snap the screws in the four cover corners.
The screws are then captive.
② Fit the cover on the base (one turn on screws, max. 2.5Nm).
③ If necessary, stick the total isolation symbol on the cover.

Mounting of the pivoting doors

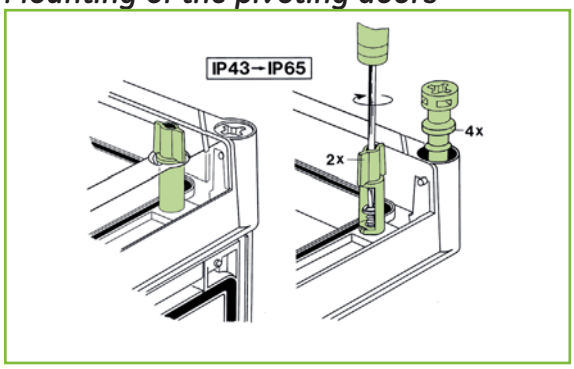

Install the door locking screws on the door frame with self tapping screws.
Protection degree:
IP43: door locking screws open
IP65: door locking screws closed

End plate installation

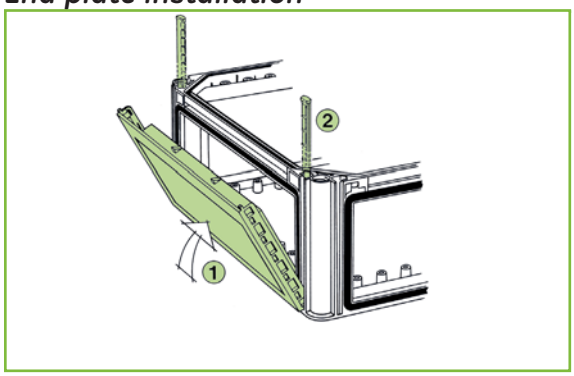

① Position the end plate in the base opening bottom. Snap the plate completely in the opening.
② Lock the end plate by means of two locking pins, insert them simultaneously.

Cable gland installation in the combi end plate

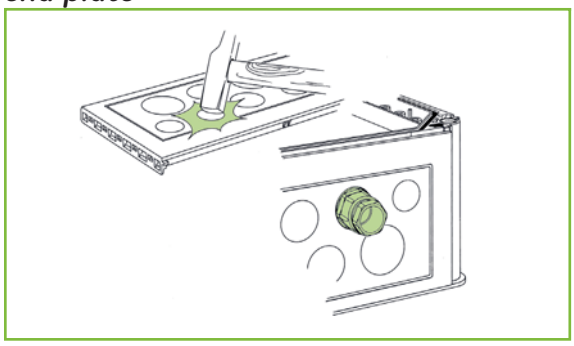

Installation of depth extension frame

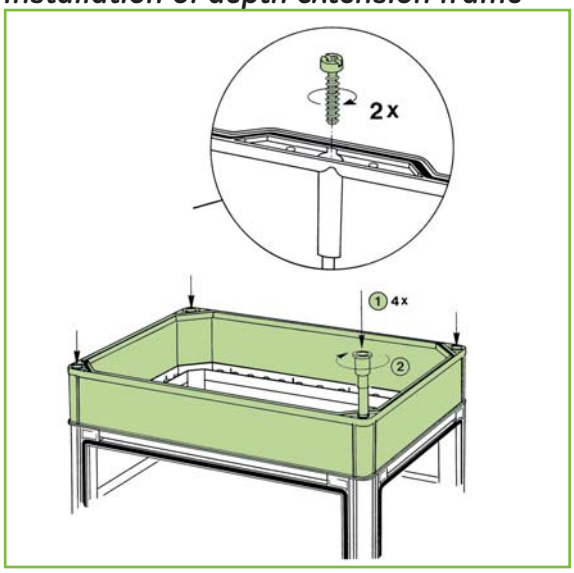

① Snap the screws frame corners. The screws are then captive
② Tighten the frame onto the base with the screws.

For the extension frames with 640 mm side, additional fixation with two self tapping screws.

Mounting of the cable end plates

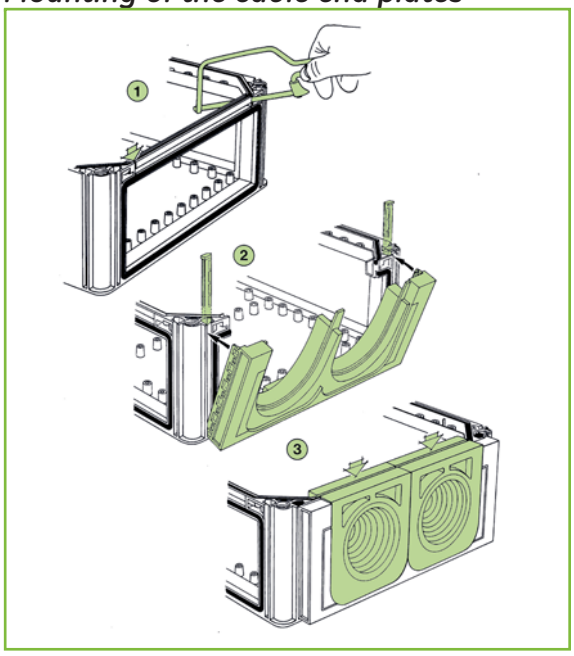

① Cut the top base lip following the marks.
Side 320 - opening is 220 mm.
Side 440 - opening is 320 mm.
② Install the end plate in the channel of the base bottom, then press against the side wall.
Lock with the locking pins.
③ Insert the rubber cable entries in the end plates.

Installation of the stress relieving cable clamp

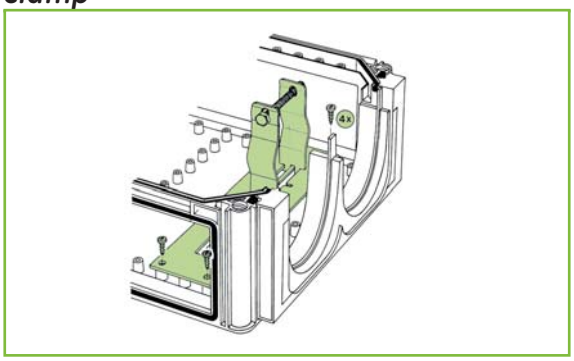

Install the stress release support with the four self tapping screws.
Install the stress release clamps in the sleeve.
Lock with the bolt and nut.

Installation of the bridge

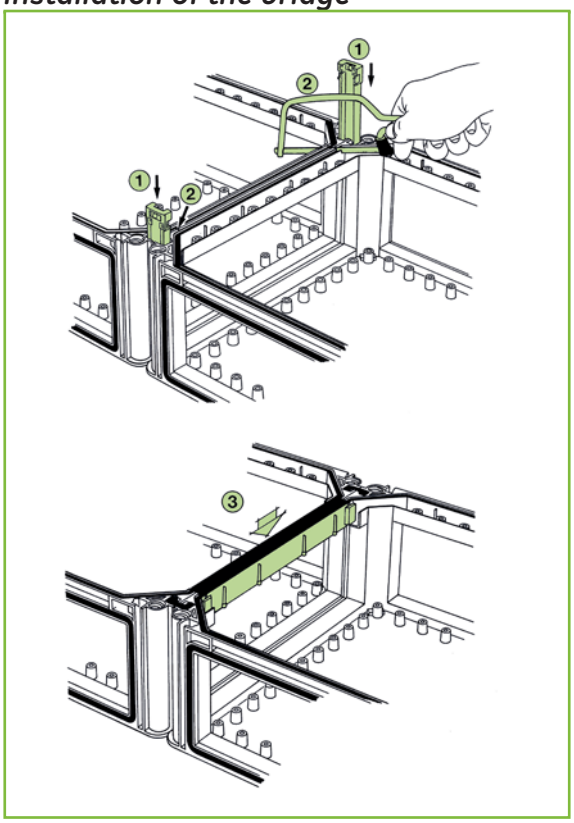

① Couple the two bases with dowels.
② Cut the top adjacent side lips following the markings.
③ Stick the self-adhesive gasket and press it into the bridge gutter. Install the bridge between the two bases.

Installation of the universal support

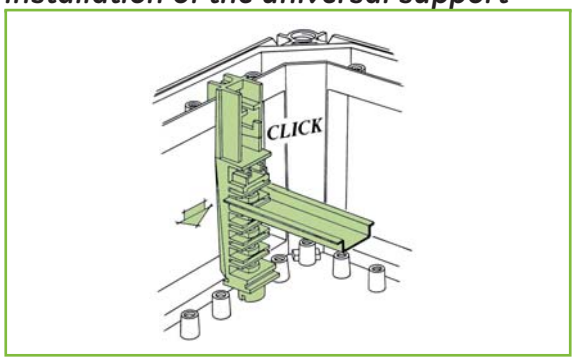

Insert the universal support on the base insert.
Simultaneously fit the support on the inner lip.
Press completely.

Unlocking the universal support

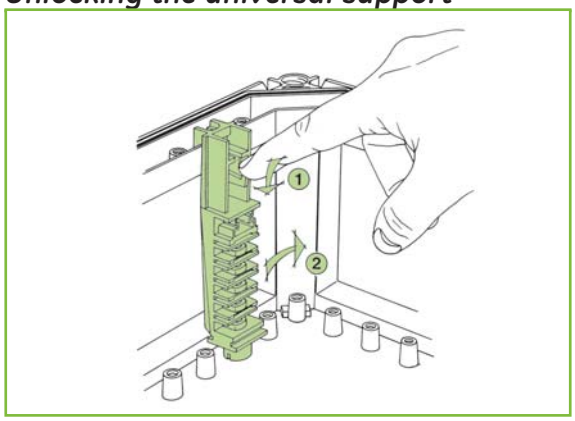

Press the locking latch towards the bottom.
Lift the support.

Capabilities of the universal support

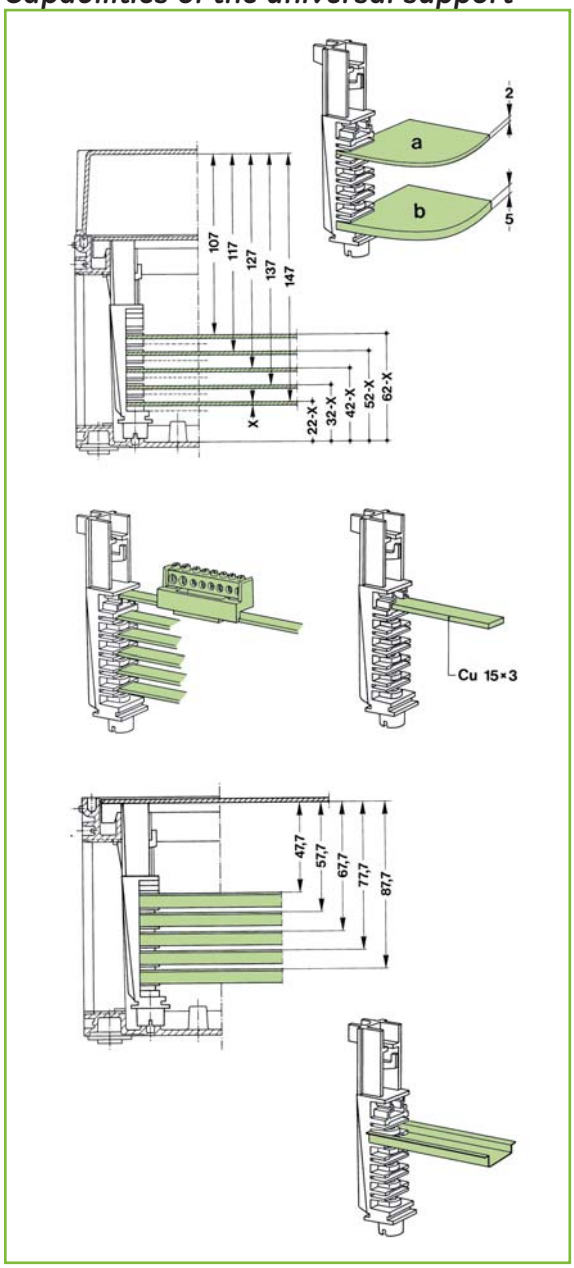

- Metal mounting plates (a) or pertinax plates (b)
- Copper rails 15 x 3
- Flat bar 12 x 2 mm
- Symmetrical DIN-profile

Installation of the mounting plates

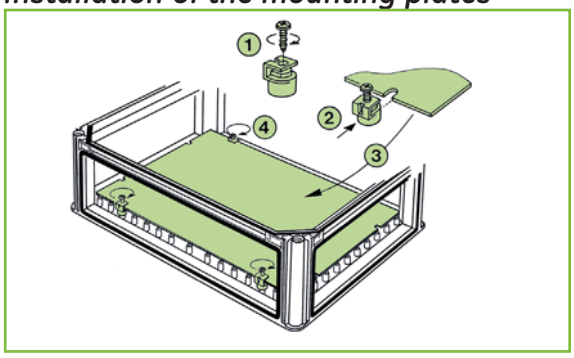

① Rotate the screws one turn in each support.
② Insert the four supports in the mounting plate slots.
③ Install the plate with the supports in the bottom of the base.
④ Tighten the screws.

Installation of the cover plates

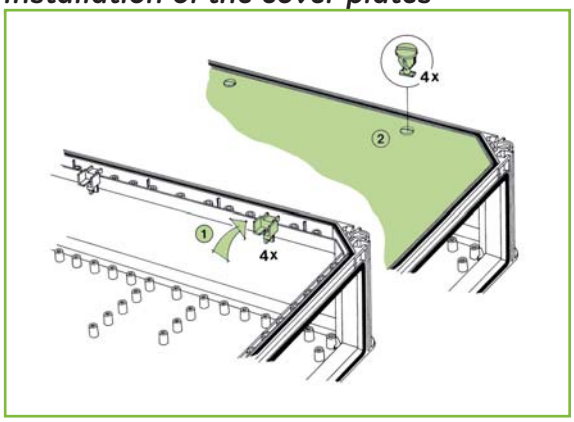

① Snap the four supports on the base inner lip.
② Install the four quarter-turn fasteners on the cover plate. Fit the cover plate on the supports by turning the fasteners.

Installation of the air vents

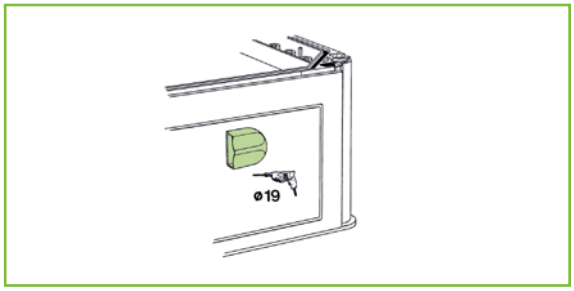

Drill a Ø 19 mm hole, install the air vent and screw the nut.

Installation of the partition plates

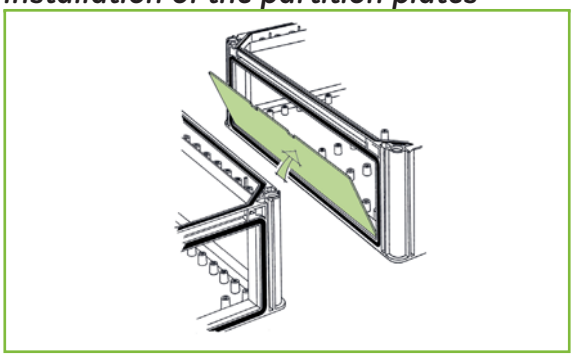

Install the partition plate between the two bases to be coupled.
The plate must be mounted with the slots on the top.

Installation of the hinges

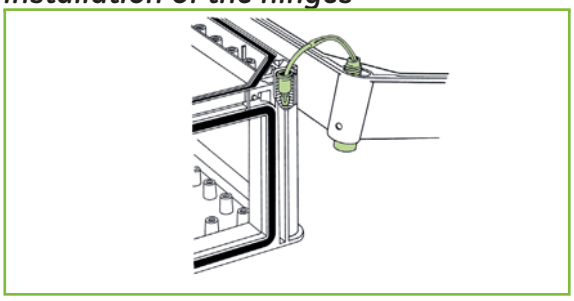

Before the hinge installation, install the mounting brackets on the base, or install the enclosure on the wall or on the supporting frame.
Introduce the hinges in the screw holes of the cover. Insert in the base corners. Turn the screw until locked (360°).

Installation of the mounting brackets

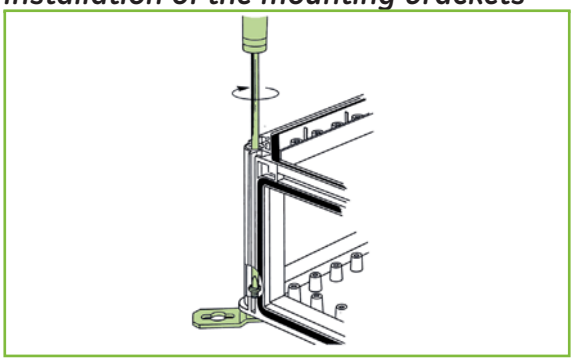

Fit the brackets in the proper orientation (0°, 45°, 90°).
Screw through the base corner holes.

Installation of the busbar support

Define the required rated current.
Install the busbar supports on the fixing points located in the base bottom.
Tighten with two screws. Introduce the copper bars in the support and set with the reversible top plate and four screws.

125A / 250A – horizontal

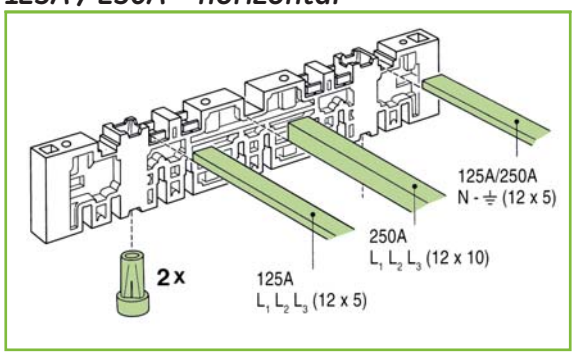

630A – parallel

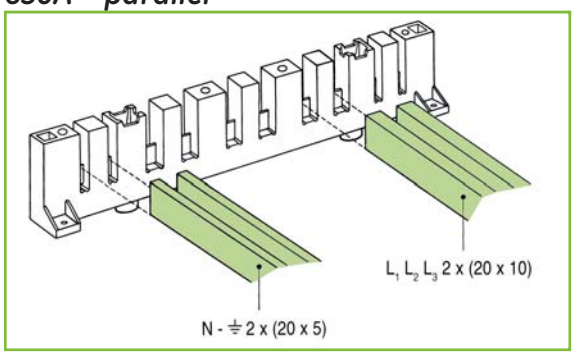

250A – parallel

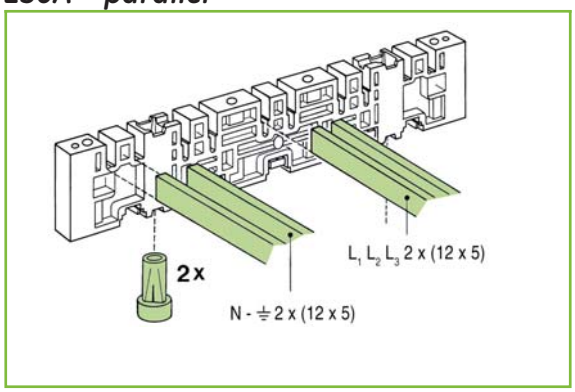

1250A – parallel

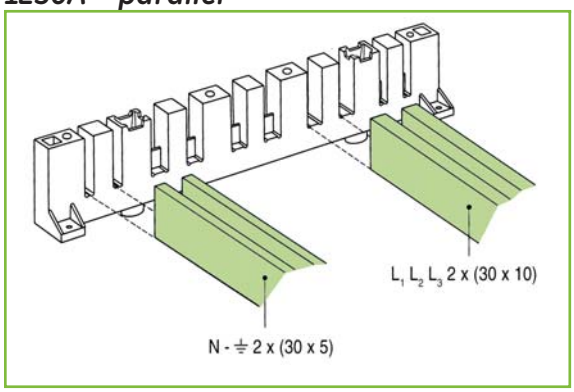

400A – parallel

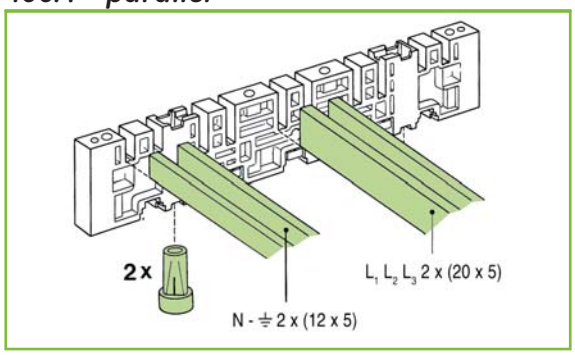

Fixing upper part busbar support

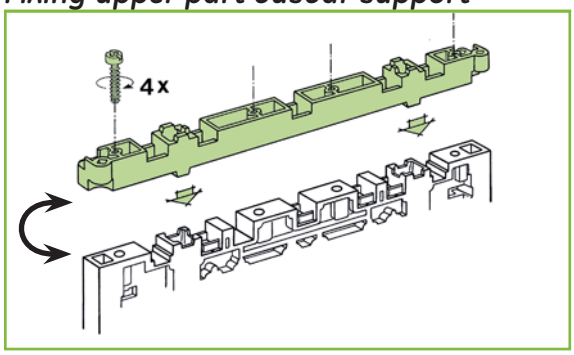

630A – horizontal

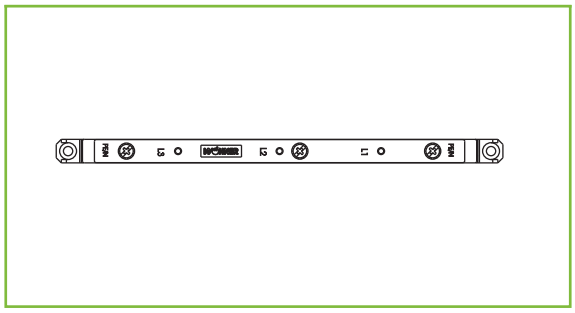

Fixing upper part busbar support

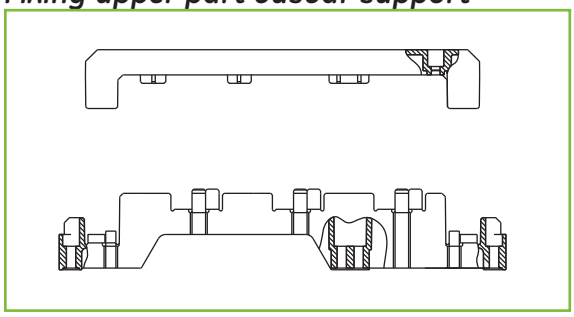

Type tested distribution cabinet

Features

- Secure: total insulation
- Protection degree: IP43-IK08
- Double wall: a sheet steel outer wall plus an inner insulated extruded wall
- Universal: for DIN-rail equipment up to 92.5 mm
- Installation friendly: ample wiring room and a removable mounting frame
- Flexible cable entries, integrated in the base

Components

The Fix-o-Rail Senior cabinet includes:
- base in RAL 9016
- mounting frame
- labels for circuit indication
- coverplates
- a transparent or grey door in RAL 9016
- closed by handle without lock
- sealing option

Approvals/Marking

CEBEC CE

Applications

As an elegant insulated cabinet in:
- restaurants and hotels
- workshops
- hospitals
- shopping centers
- offices
- commercial buildings
- leisure and sport locations

Overview of the range ● Page C.2
Dimensional drawings ● Page I.28
Specifications for tender documents ● Page I.55
Power dissipation values ● Page I.73

Fix-o-Rail Senior

		H x W x D	Number of modules	Number of rows	Ref. No.	Pack.
	Plain door	650 x 300 x 210	48	4	**610239**	1
		800 x 300 x 210	60	5	**610248**	1
		650 x 550 x 210	96	4	**610240**	1
		800 x 550 x 210	120	5	**610249**	1
		950 x 550 x 210	144	6	**610257**	1
		1100 x 550 x 210	168	7	**610241**	1
		1250 x 550 x 210	192	8	**610242**	1
		1100 x 800 x 210	252	7	**610243**	1
		1250 x 800 x 210	288	8	**610244**	1
	Transparent door	650 x 300 x 210	48	4	**610328**	1
		800 x 300 x 210	60	5	**610330**	1
		650 x 550 x 210	96	4	**610329**	1
		800 x 550 x 210	120	5	**610331**	1
		950 x 550 x 210	144	6	**610332**	1

Accessories

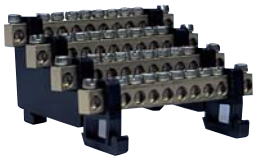

4 pole terminals 63A

610022	12

Rail section 6.5 x 9

4 pole terminals 160A

617992	1

With cover - for DIN-rail mounting

4 pole terminals 160A

610020	15

Rail section 12 x 5

Short-circuit capacity 35kA peak 10 ms

Protective shroud

610021	1

For 160A terminal

Earth bar

828152	1

For enclosure width 300 mm

828153	1

For enclosure width 550 mm

828149	1

For enclosure width 800 mm

Length 684 mm

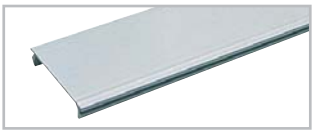

Blank plate

828056	1m

For screening off rectangular openings

For cut out of 45 mm

Adaptor kit = A + B + C

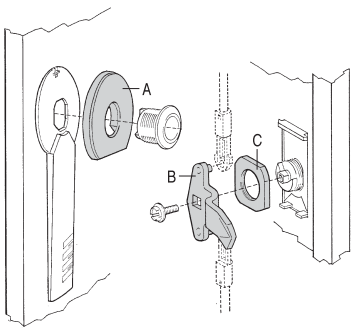

Plain plate

815094	1

Pre-drilled plates

1	815093	1

17 x PG13,5

2	815092	1

1 x PG21 - PG48 / 2 x PG13,5

2 x PG29 / 4 x PG13,5

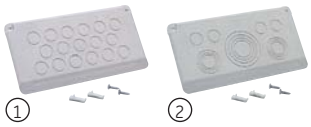

Label for circuit indication

610232	10

For enclosure width 300 mm

610233	10

For enclosure width 550 mm

Document pocket

811516	1

DIN A4 - W x H = 325 x 180 mm

832000	1

DIN A5 - W x H = 155 x 225 mm

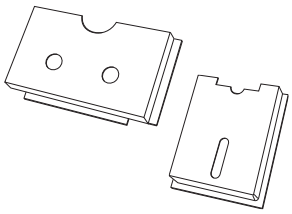

Locking device

815105	1

Adaptor kit

+

811327	1

Insert 3 mm double bit

Key **832028** to be ordered separately

811326	1

Insert 8 mm triangle

Key **832027** to be ordered separately

811325	1

Insert 8 mm square

Key **832026** to be ordered separately

811331	1

Cilinder lock with 2 keys V2432-E

813146	1

Neutral handle

813156	1

Handle with key on V2432-E

The standard handle can be replaced by adaptor + insert or handle

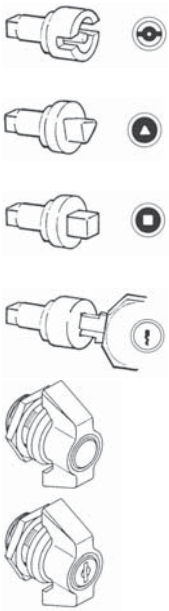

Notes

D.2 **QuiXtra™ *630*** - Type tested distribution boards
D.28 **PowerDesign** - Design and quotations software
D.29 **Modula Plus** - Low voltage distribution boards

QUICK

Safe

- Verification tested system enclosure
- Designed according to the new IEC 61439-2
- IP43 with door and IP43 profile
- Internal segregation up to Form 2
- Tempered glass for transparent door

Simple and Flexible

- Enclosures widths for 12, 24 and 36 modules
- Enclosures heights from 3 up to 12 rows of 150mm
- Horizontal coupling
- 1 functional unit = 1 reference, including all parts to mount LV devices
- Modular concept: all functional units in steps of 50mm in height

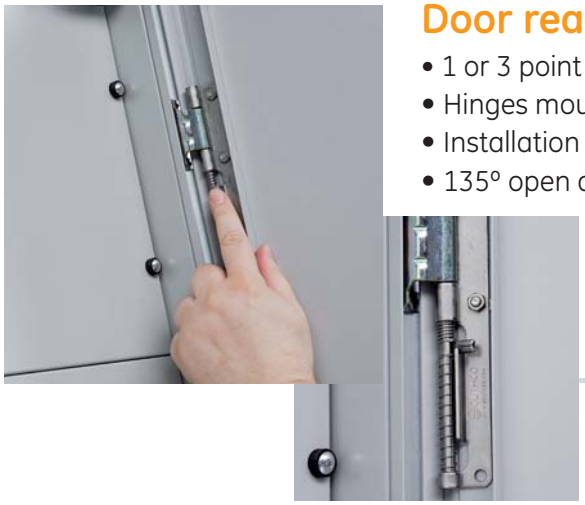

Door ready to mount

- 1 or 3 point locking system already mounted
- Hinges mounted
- Installation without tools
- 135° open angle

QuiXtra™ 630
Low Voltage panel

SIMPLE

Attractive design

- Fits perfectly in commercial environments
- Colours RAL 9006 and RAL 7024

Easy and quick to assemble

- Assembly by a single person
- Pre-assembled captive screws
- 90° screws for cover plates
- Click-in supports for functional units and busbar holders. No tools needed
- Frame to remove all cover plates at once!

Rigid and sturdy

- Rear panel 1.5 mm thick
- Bent to increase rigidity
- Die-cast aluminium corner parts

PowerDesign

New generation of software to help customers with the configuration, design and quotation of low voltage system enclosures

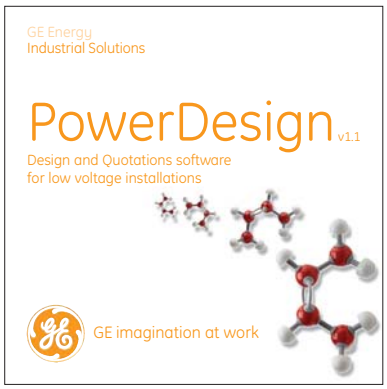

Applications

QuiXtra 630 has been developed as a range of system enclosures, GE's complete solution for low voltage distribution boards up to 630A for commercial and industrial environments.

QuiXtra 630 is delivered as a flat kit, to be assembled, equipped and wired by a panel builder or installer. The QuiXtra 630 range consists of both wall mounting and floor standing sheet steel enclosures, as well as busbars and functional units to easily integrate all types of low voltage electrical devices up to 630A.

The combination of the QuiXtra 630 enclosure and original GE LV electrical devices are designed according the new standard IEC 61439-2.

- Industrial
- High commercial
- Low commercial

Industrial
- Plants
- Small factories
- Waste recycling
- OEM
- Components-parts productions
- Printing

High commercial (as a secondary panel)
- Telecommunication
- Data–call centers
- Airports
- Hospitals
- Banks
- Public transportation
- Railways
- Subways
- Government buildings

Low commercial (as a main panel)
- Commercial offices
- Shopping malls
- Schools
- Stores
- Gasoline stations
- Restaurants
- Small shops

Overview of the range ● Page D.11
Dimensional drawings ● Page I.29
Specifications for tender documents ● Page I.56
Power dissipation values ● Page I.74

Description

QuiXtra 630 is a range of sheet steel system enclosures, delivered as a flat kit. It is GE's solution for low voltage distribution boars up to 630A, in commercial and industrial environments.

QuiXtra 630 is designed to be a reliable, simple, flexible and easy to use system enclosure, with the added value of its fresh and attractive design that integrates perfectly into a commercial environment.

The QuiXtra 630 range consists of 24 different enclosures. There are nine enclosure heights available, from 450mm up to 1800mm, and three enclosure widths, for functions of 12, 24 and 36 modules. All enclosures have the same depth (220mm without door and 250mm with door), allowing horizontal coupling and providing the user total flexibility to define the layout of the LV distribution boards.

A QuiXtra 630 system enclosure is assembled in 5 steps!

Step 1	Step 2	Step 3	Step 4	Step 5
The rear, top and bottom panels	The busbar system	The cable entry plates and functional units for the electrical devices	The side panels	The door (if required)

Assembling the top, bottom and side panels to the back-panel can be done by a single person. To facilitate this, the panel foresees guide ledges to avoid mistakes during assembly. The QuiXtra 630 enclosures can be coupled horizontally to build any required distribution board layout.

QuiXtra 630 can be installed as a wall mounting or as a floor standing enclosure. For the enclosures with a useful height of 1350mm or higher a 100mm high base needs to be added (ordered separately). For the smaller enclosures, the base is available as an option.

The QuiXtra 630 protection degree is either IP30, IP40 or IP43. IP30 is achieved simply using the coverplates delivered with each functional unit, without the need for a door. Simply adding a door to each enclosure increases the protection degree to IP40, without the need for an additional gasket. Adding the IP43 profile and the door, the protection degree is IP43.

GE's complete solution for low voltage distribution boards up to 630A for commercial and industrial environments.

Description (continued)

QuiXtra 630 offers plain and transparent (tempered glass) doors, for an easy inspection of the devices installed inside the enclosure. The doors are equipped with a one or a three point closing mechanism (depending on the enclosure height), operated by a central handle. The handle is delivered with a standard lock insert for key 2432E. The opening angle is 135 degrees. Attaching the doors to the enclosure is done without tools, using the simple pin-hinges. The doors are delivered with hinges and locking mechanism already mounted, to reduce assembly time.

All GE LV electrical devices up to 630A can be easily assembled in QuiXtra 630 using the appropriate functional units. Each functional unit kit includes everything necessary for assembly:

- A mounting plate or DIN rail
- A support to attach to the enclosure
- A coverplate (with precise cut-outs)
- The required screws and other fixation parts.

Attaching the mounting plates or DIN rails does not require tools: they are attached to the rear mounting profile using a "click in" support. The coverplates are attached to two profiles using captive 90° screws. By removing these profiles, all cover plates can be removed at the same time.

QuiXtra 630 has sufficient wiring space for any possible layout. Each side has room for a vertical 60mm cable-duct. The vertical and the horizontal cable-ducts can be integrated in different depths to suit the users' needs. QuiXtra 630 offers a variety of different cable entry plates for the top and bottom panels, to assure enough space for the cable entry and to cover all type of panel installations.

For upgrades and maintenance, the end user has direct access to the *vertical cable ducts* of up to 40 mm (in each side of the functions) in an installed panel, simply by removing the coverplates. If wider space is required, it's necessary to disassemble the *side panels*, which can be separately removed.

The connectivity in Quixtra 630 is based on rear mounted and staircase busbars. The *rear busbar* can be mounted horizontally or vertically. For the rear mounted busbar, a single insulator type is suitable for different cross sections of copper bars.

The *staircase busbar* can be installed vertically in the 12 module enclosure and horizontally in the 24 and 36 module enclosures. In either case, functions cannot be mounted on top.

The aesthetics of QuiXtra 630 make it particularly suitable for commercial environments. The QuiXtra 630 colour is is white aluminium, RAL 9006. The external corner parts, the handle and the base are in dark grey, RAL 7024. The tempered glass of the transparent door is lightly smoked grey.

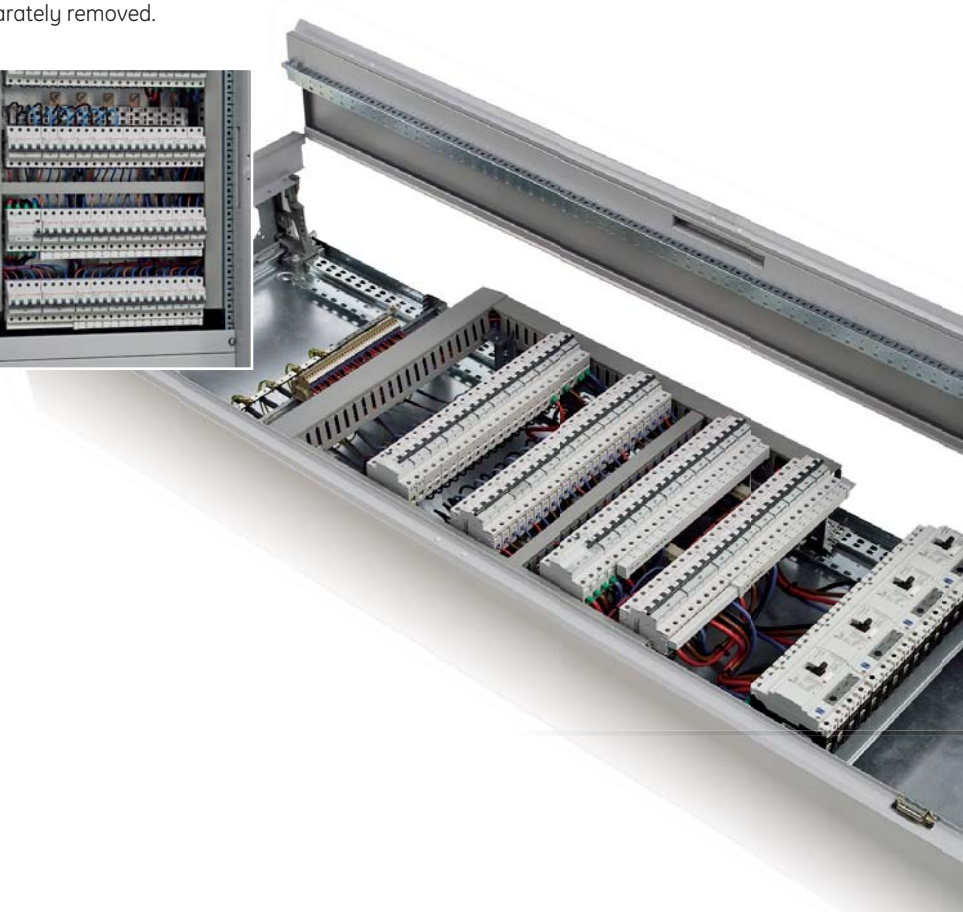

Features and Benefits

Simple and flexible

- Enclosures widths for 12, 24 and 36 modules
- Enclosures heights from 3 up to 12 rows of 150mm
- Horizontal coupling of 2 or more enclosures
- Modular concept. All functions in steps of 50mm in height
- Functional kits for GE low voltage electrical devices up to 630A. Mounting of GE devices in vertical or horizontal position
- The busbars can be assembled in vertically or horizontally
- Accessories to facilitate panel wiring and assembly
- Each functional unit includes all parts necessary for assembly: mounting plate or DIN rail, supporting brackets, cover plate (with precise cut-outs) and all required fixation elements.

Easy and quick to assemble

- Assembly by a single person
- "Click in" supports for functions and busbar holders. No tools needed
- 90° screws for cover plates
- Pre-assembled captive screws
- Guiding ledges in back panel for top and side panel fixation
- Door assembly without tools. Doors delivered with locking system and hinges pre-mounted (key 2432E)
- Generous wiring space, enough for vertical cable ducts of 60mm on each side
- Frame allowing the removal of all cover plates at the same time
- Markings in the fixation profiles to quickly position the functional units and cover plates
- Pre-punched cable entry glands as option

Safe for users, reliable and sturdy

- Verification tested system enclosure, designed according to the new IEC 61439-2 standard
- IP43 with door, without additional gaskets
- IP40 with door and without IP43 profile
- IP30 without door
- Back panel galvanized sheet steel, 1.5mm
- External panels sheet steel, 1.25mm, power coated
- Aluminium corner parts provide additional rigidity to both stand-alone and coupled enclosures
- Internal segregation: Form 2
- Tempered glass for the transparent door

Attractive design

- Optimal integration in commercial environments
- Combination of two colours: RAL 9006 (metallic silver) and RAL 7024 (dark grey)

Kit structure

QuiXtra 630 is a system enclosure delivered in flat kits, to be assembled, equipped and wired by the panel builder and installer.

1. Basic kit

The kit includes:
- Rear panel
- Top panel
- Bottom panel
- Four die-cast aluminium corner parts
- Two rain profiles
- Two filler plates

- The rear panel already has the two functional mounting profiles integrated, to which the supports for the DIN rails, the mounting plates and the isolators can be attached.
- The filler plates serve to cover the corner parts and receive the door locking mechanism
- The die-cast aluminium corner parts are fixed to the back-panel using two screws.

✔ *For enclosures of useful height of 1350, 1500 and 1800mm, the bottom panel is not delivered. It is mandatory to add the floor base of 100mm.*

2. Side panel kit

The kit includes:
- Two side panels, with two vertical profiles to fix the coverplates
- Four external corner parts for the wall mounting sizes (between 450 and 1200mm)
- Two external corner parts for the floor standing sizes (1350, 1500 and 1800mm)

An enclosure is built of 3 main kits

3. Door

The kit includes:
- Plain door, available for all enclosure sizes
- Transparent door, for enclosure 24 and 36 modules wide
- The locking mechanism, handle and hinges are delivered mounted on the door
- One lock insert with two keys 2432E is included

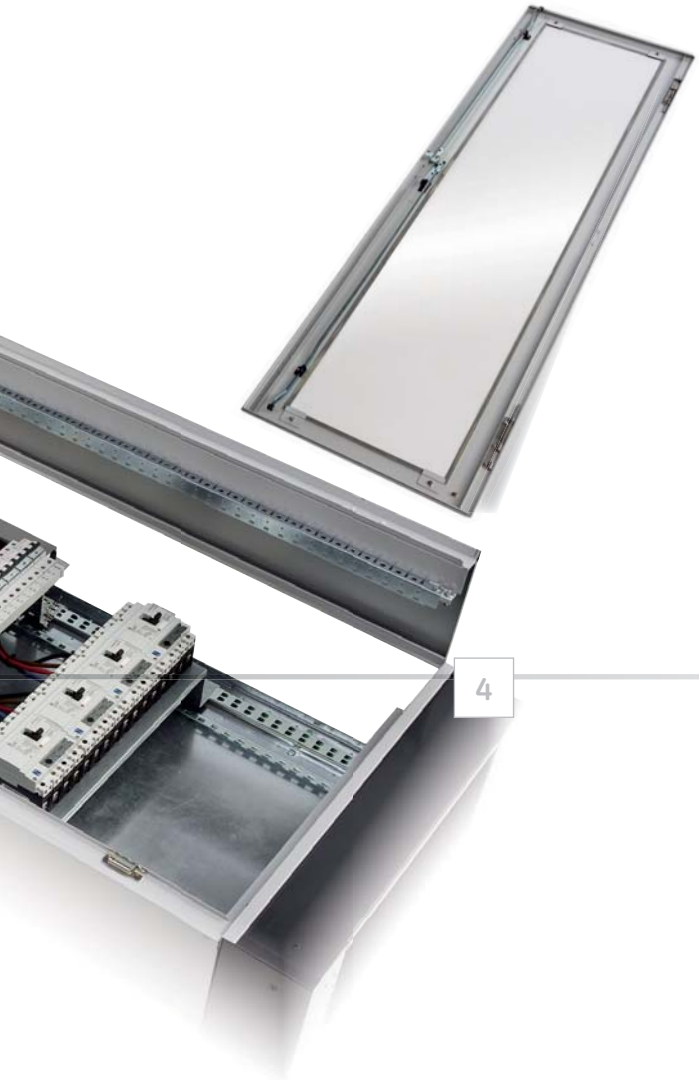

Additional options

Cable entry plates
Only one cable size entry plate, in 8 different configurations.
Coupling kit
- Vertical profiles to join the rear panels and U parts to join the aluminium corner parts
- A vertical beam for the front, with two vertical profiles to fix the coverplates
- Two plastic parts to join the top and bottom panels. (Photo 7)

Horizontal reinforcement profiles
Two horizontal profiles reinforce coupled enclosures. (Photo 8)
Floor base
Base and fixation elements. Removable front plate to improve accessibility. Rods can be inserted to transport a finished enclosure with a forklift.
Functional units
DIN rail or mounting plate with two supports to mount into the rear vertical profiles. Includes cover plate with precise cut-outs and all the fixation elements. (Photo 9)
Coverplates
Extra blind plates available.
Busbar supports
The kit includes the busbar holders and the support, delivered with all fixation parts.
Mounting plates
Includes plain metal mounting plate, supports and fixation elements.
Special functions
Meters, push-buttons P9

1	Without the cable entry plates, and with vertical profiles for the coverplates
2	Enclosure with floor base included
3	Side panels
4	Door
5	Cable entry plates
6	Coupling of enclosures
7	Coupling of enclosures (plastic parts)
8	Coupling the back panels and wall mounting brackets
9	Functional unit

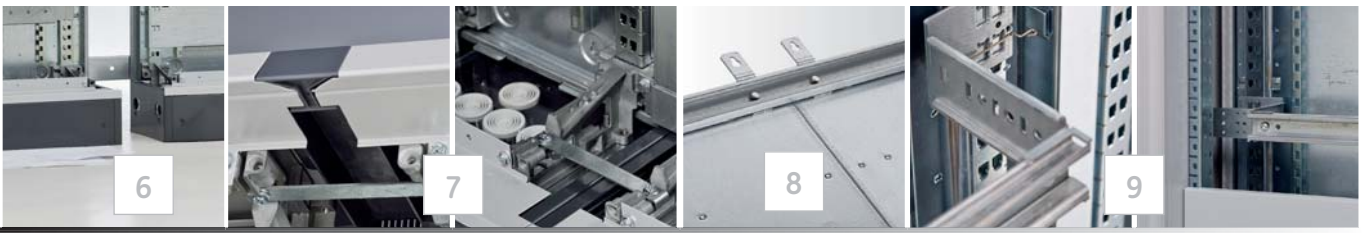

Main technical characteristics

Useful and external dimensions (mm)

External height	Useful height	Rows 150mm	External width			Depth with door
			12 modules	24 modules	36 modules	
600	450	3	-	660	-	250
750	600	4	364	660	-	250
900	750	5	364	660	876	250
1050	900	6	364	660	876	250
1200	1050	7	364	660	876	250
1350	1200	8	364	660	876	250
1600	1350	9	364	660	876	250
1750	1500	10	364	660	876	250
2050	1800	12	364	660	876	250

Material and colour

Rear panel & mounting profiles	Sendzimir zinc plated steel 1.5 mm
Side, top and bottom panel	Epoxy-polyester coated sheet steel 1.25 mm
Plain door	Epoxy-polyester coated sheet steel 1.25 mm
Transparent door	Epoxy-polyester coated sheet steel 1.25 mm and smoked safety glass 3 mm.
Cover plates	Epoxy-polyester coated sheet steel 1 mm
External corner and coupling parts	ABS
Internal corner plates	Die-cast aluminium
Enclosure colour	RAL 9006
Floor base colour	RAL 7024

Protection degree and segregation form

Protection class	I
Pollution degree	2
Segregation	Form 1 & Form 2
Protection degree	
Without door	IP30, IK08
With plain door & without IP43 profile	IP40, IK09
With plain door and IP43 profile	IP43, IK09
With transparent door	Same IP as plain door, IK08

Standards and approvals

Standards	IEC 60439-1
	EN 60439-1[1]
Approval	KEMA KEUR
Certification	KEMA
RoHS	Compliant

Electrical characteristics

Rated current (In)	630 A
Rated operational voltage (Ue)	415 V
Rated insulation voltage (Ui)	690 V
Rated frequency (fn)	50/60 Hz
Rated short-circuit current (Icw)	30 kA/1s
Rated current of busbar systems	630 A in IP43

(1) According to EN 61439-2: KEMA approval pending.

More detailed technical data in chapter C

Full enclosure range

12 modules - width: 364 mm/depth: 250 mm

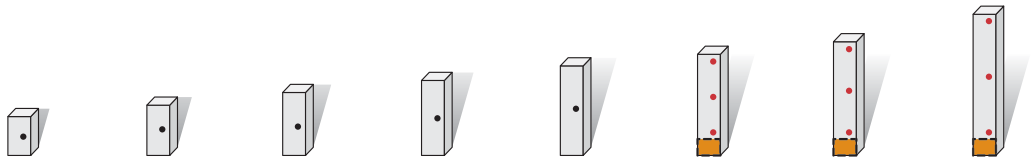

H	**600**/750	**750**/900	**900**/1050	**1050**/1200	**1200**/1350	**1350**/1600	**1500**/1750	**1800**/2050
R	4R	5R	6R	7R	8R	9R	10R	12R

24 modules - width: 660 mm/depth: 250 mm

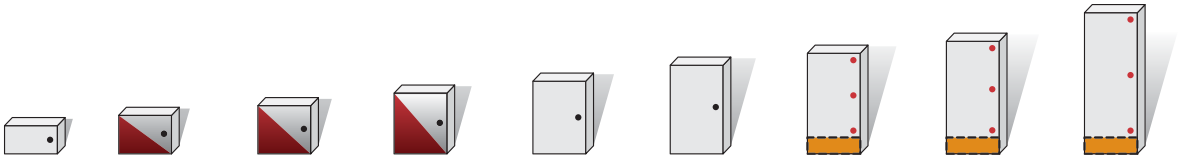

H	**450**/600	**600**/750	**750**/900	**900**/1050	**1050**/1200	**1200**/1350	**1350**/1600	**1500**/1750	**1800**/2050
R	3R	4R	5R	6R	7R	8R	9R	10R	12R

36 modules - width: 876 mm/depth: 250 mm

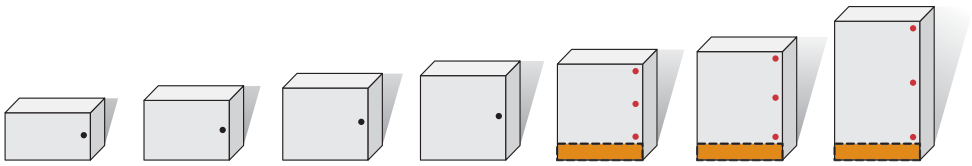

H	**750**/900	**900**/1050	**1050**/1200	**1200**/1350	**1350**/1600	**1500**/1750	**1800**/2050
R	5R	6R	7R	8R	9R	10R	12R

H **Useful height/**external height
R **Number of rows of 150 mm**

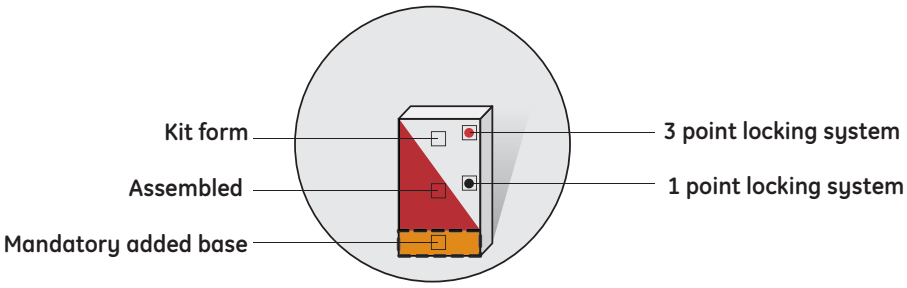

Order codes enclosures in kit form

12 modules - width: 364 mm/depth: 250 mm

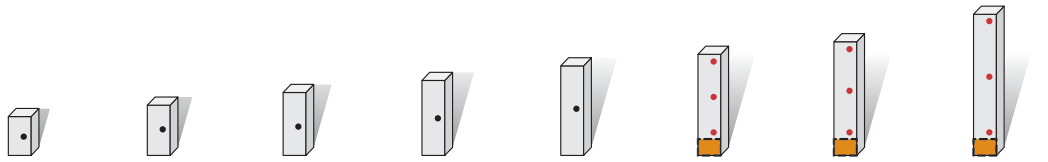

H	**600**/750	**750**/900	**900**/1050	**1050**/1200	**1200**/1350	**1350**/1600	**1500**/1750	**1800**/2050
R	4R	5R	6R	7R	8R	9R	10R	12R

24 modules - width: 660 mm/depth: 250 mm

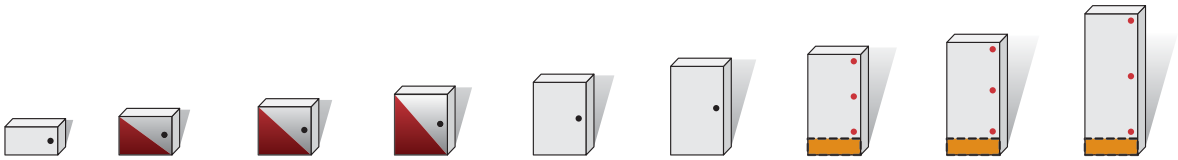

H	**450**/600	**600**/750	**750**/900	**900**/1050	**1050**/1200	**1200**/1350	**1350**/1600	**1500**/1750	**1800**/2050
R	3R	4R	5R	6R	7R	8R	9R	10R	12R

36 modules - width: 876 mm/depth: 250 mm

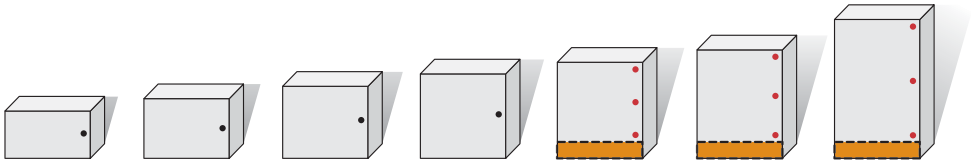

H	**750**/900	**900**/1050	**1050**/1200	**1200**/1350	**1350**/1600	**1500**/1750	**1800**/2050
R	5R	6R	7R	8R	9R	10R	12R

H **Useful height/**external height
R **Number of rows of 150 mm**

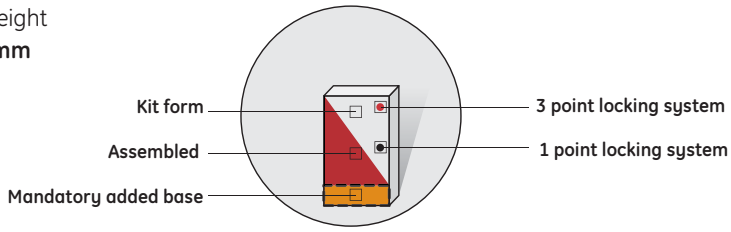

Basic kit
- Rear panel
- Top and bottom panels
- 2 vertical profiles
- 4 aluminium corner parts
- Fixation elements

✔ *Mandatory to add floor base for enclosures 9, 10 and 12 rows*

Side panel kit
- 2 side panels
- 2 profiles to fix coverplates
- Plastic corner parts
  - 4 units for enclosures up to 8 rows
  - 2 units for 9, 10 & 12 rows enclosures
- Fixation elements

12 modules enclosures - width: 364 mm/depth: 250 mm

External height (mm)	Useful height (mm)	# rows 150mm	# modules	Basic kit[1]		Side panel kit[3]		Plain door	Transparent door	Coupling kit[4]
				12 modules						
600	450	3	36	-		885027		-	-	-
750	600	4	48	885000	+	885028	+	885044	-	885036
900	750	5	60	885001	+	885029	+	885045	-	885037
1050	900	6	72	885002	+	885030	+	885046	-	885038
1200	1050	7	84	885003	+	885031	+	885047	-	885039
1350	1200	8	96	885004	+	885032	+	885048	-	885040
1600	1350	9	108	885005[2]	+	885033	+	885049	-	885041
1750	1500	10	120	885006[2]	+	885034	+	885050	-	885042
2050	1800	12	144	885007[2]	+	885035	+	885051	-	885043
Floor base	-	-	-	885084		-		-	-	-

24 modules enclosures - width: 660 mm/depth: 250 mm

External height (mm)	Useful height (mm)	# rows 150mm	# modules	Basic kit[1]		Side panel kit[3]		Plain door	Transparent door	Coupling kit[4]
				24 modules						
600	450	3	72	885008		885027		885052	885068	-
750	600	4	96	885009	+	885028	+	885053	885069	885036
900	750	5	120	885010	+	885029	+	885054	885070	885037
1050	900	6	144	885011	+	885030	+	885055	885071	885038
1200	1050	7	168	885012	+	885031	+	885056	885072	885039
1350	1200	8	192	885013	+	885032	+	885057	885073	885040
1600	1350	9	216	885014[2]	+	885033	+	885058	885074	885041
1750	1500	10	240	885015[2]	+	885034	+	885059	885075	885042
2050	1800	12	288	885016[2]	+	885035	+	885060	885076	885043
Floor base	-	-	-	885085		-		-	-	-

36 modules enclosures - width: 876 mm/depth: 250 mm

External height (mm)	Useful height (mm)	# rows 150mm	# modules	Basic kit[1]		Side panel kit[3]		Plain door	Transparent door	Coupling kit[4]
				36 modules						
600	450	3	-	-		885027		-	-	-
750	600	4	-	-	+	885028	+	-	-	885036
900	750	5	180	885020	+	885029	+	885061	885077	885037
1050	900	6	216	885021	+	885030	+	885062	885078	885038
1200	1050	7	252	885022	+	885031	+	885063	885079	885039
1350	1200	8	288	885023	+	885032	+	885064	885080	885040
1600	1350	9	324	885024[2]	+	885033	+	885065	885081	885041
1750	1500	10	360	885025[2]	+	885034	+	885066	885082	885042
2050	1800	12	432	885026[2]	+	885035	+	885067	885083	885043
Floor base	-	-	-	885086		-		-	-	-

(1) Includes rear, top and bottom panel (side panels not included).
(2) Bottom panel not included. Mandatory to order the floor base separately.
(3) Includes two side panels and external corner parts.
(4) When coupling 2 or more enclosures, only 2 side panels are necessary.

How to order examples see page D.14

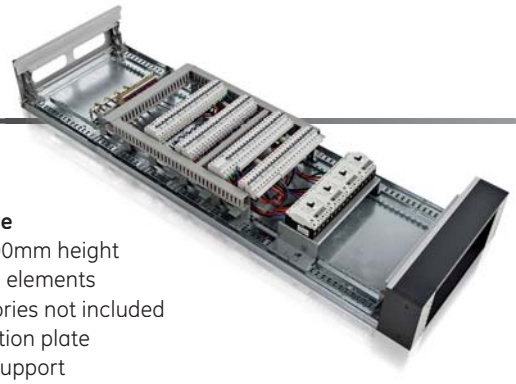

Floor base
- Base 100mm height
- Fixation elements
- Accessories not included
  - Separation plate
  - Cable support

Doors
- Door
- Locking mechanism assembled
- Handle assembled
- Locking insert key 2432E
- Hinges assembled

How to order

Example of individual 24 modules enclosure

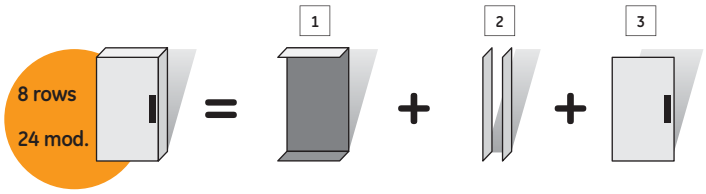

1 BASIC KIT 24 modules
2 SIDE PANEL KIT
3 DOOR (plain or transparent)

24 modules enclosures - width: 660 mm/depth: 250 mm

External height (mm)	Useful height (mm)	# rows 150mm	# modules	Basic kit[1]		Side panel kit[3]		Plain door	Transparent door	Coupling kit[4]
				24 modules						
600	450	3	72	885008		885027		885052	885068	-
750	600	4	96	885009	+	885028	+	885053	885069	885036
900	750	5	120	885010	+	885029	+	885054	885070	885037
1050	900	6	144	885011	+	885030	+	885055	885071	885038
1200	1050	7	168	885012	+	885031	+	885056	885072	885039
1350	**1200**	**8**	**192**	**885013**	**+**	**885032**	**+**	**885057**	**885073**	**885040**
1600	1350	9	216	885014[2]	+	885033	+	885058	885074	885041
1750	1500	10	240	885015[2]	+	885034	+	885059	885075	885042
2050	1800	12	288	885016[2]	+	885035	+	885060	885076	885043
Floor base	-	-	-	885085		-		-	-	-

Example of coupled 24 and 12 modules enclosures

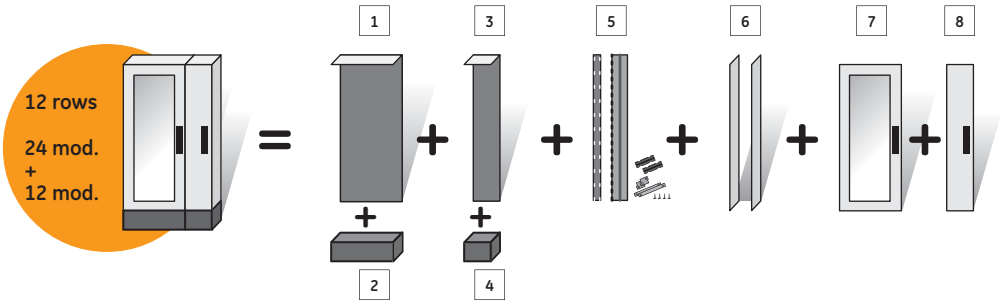

1 BASIC KIT 24 modules
2 + floor base
3 BASIC KIT 12 modules
4 + floor base
5 COUPLING KIT
6 SIDE PANEL KIT
7 DOOR transparent, 24 mod.
8 DOOR plain, 12 mod.

24 modules enclosures - width: 660 mm/depth: 250 mm

External height (mm)	Useful height (mm)	# rows 150mm	# modules	Basic kit[1]		Side panel kit[3]		Plain door	Transparent door	Coupling kit[4]
				24 modules						
600	450	3	72	885008		885027		885052	885068	-
750	600	4	96	885009	+	885028	+	885053	885069	885036
900	750	5	120	885010	+	885029	+	885054	885070	885037
1050	900	6	144	885011	+	885030	+	885055	885071	885038
1200	1050	7	168	885012	+	885031	+	885056	885072	885039
1350	1200	8	192	885013	+	885032	+	885057	885073	885040
1600	1350	9	216	885014[2]	+	885033	+	885058	885074	885041
1750	1500	10	240	885015[2]	+	885034	+	885059	885075	885042
2050	**1800**	**12**	**288**	**885016[2]**	**+**	**885035**	**+**	**885060**	**885076**	**885043**
Floor base	**-**	**-**	**-**	**885085**		**-**		**-**	**-**	**-**

12 modules enclosures - width: 364 mm/depth: 250 mm

External height (mm)	Useful height (mm)	# rows 150mm	# modules	Basic kit[1]		Side panel kit[3]		Plain door	Transparent door	Coupling kit[4]
				12 modules						
600	450	3	36	-		885027		-	-	-
750	600	4	48	885000	+	885028	+	885044	-	885036
900	750	5	60	885001	+	885029	+	885045	-	885037
1050	900	6	72	885002	+	885030	+	885046	-	885038
1200	1050	7	84	885003	+	885031	+	885047	-	885039
1350	1200	8	96	885004	+	885032	+	885048	-	885040
1600	1350	9	108	885005[2]	+	885033	+	885049	-	885041
1750	1500	10	120	885006[2]	+	885034	+	885050	-	885042
2050	**1800**	**12**	**144**	**885007[2]**	**+**	**885035**	**+**	**885051**	**-**	**885043**
Floor base	**-**	**-**	**-**	**885084**		**-**		**-**	**-**	**-**

(1) Includes rear, top and bottom panel (side panels not included).
(2) Bottom panel not included. Mandatory to order the floor base separately.
(3) Includes two side panels and external corner parts.
(4) When coupling 2 or more enclosures, only 2 side panels are necessary.

Assembled enclosures

- Rear panel
- Top and bottom panels
- Back profiles
- Front profiles
- Side panels

✔ *Assembled enclosures are without door*

Assembled enclosures - order codes

Useful height (mm)	# rows 150mm	24 modules
600	4	885017
750	5	885018
900	6	885019

Reinforcement profiles

Kits to reinforce several coupled enclosures, and to facilitate the transportation of the complete switchboard.

- In each kit are included: Two horizontal profiles for the adequate combinations of enclosures, and the wall mounting brackets (top).
- The profiles are assembled horizontally through the enclosures, as it is shown in the picture.

Reinforcement profiles - order codes

	Ref. No.
For coupled 12 & 24 modules enclosures	885235[1]
For coupled 12 & 36 modules enclosures	885236[1]
For coupled 24 & 12 & 24 modules enclosures	885237[1]
For coupled 36 & 12 & 36 modules enclosures	885238[1]
For coupled 36 & 12 & 24 modules enclosures	885239[1]
Hooks to mount on sides (set of 4 hooks)	885240

(1) Vertical wall mounting supports 885256 included in reinforcement profiles.

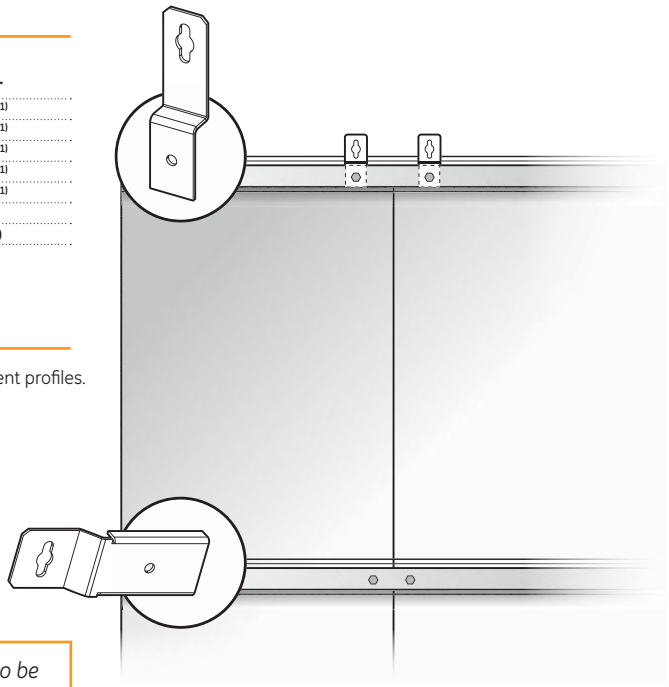

✔ *For side mounting brackets a special set* **885240** *has to be ordered additionally. Only for horizontal wall mounting.*

Cable entry plates

The enclosures are delivered without cable entry plates. The number and type of cable entry plates should be ordered following the table below.

Made in glass fibre reinforced polyester.

Cable entry plates - order codes

Type		Floor standing			Wall mounting			Ref. No.
		12 modules	24 modules	36 modules	12 modules	24 modules	36 modules	
Plain **metal IP40** (RAL 9006)	1	1	2	3	2	4	6	**885287**
In polyester IP43 (RAL 7035)								
Plain	2	1	2	3	2	4	6	**885228**
27xM20	3	1	2	3	2	4	6	**885229**
18xM25	4	1	2	3	2	4	6	**885230**
2xM63 + 1xM40 + 5xM25	5	1	2	3	2	4	6	**885231**
3xM50 + 13xM20	6	1	2	3	2	4	6	**885232**
4xM40 + 5xM32	7	1	2	3	2	4	6	**885233**
4xM40 + 8xM25	8	1	2	3	2	4	6	**885234**

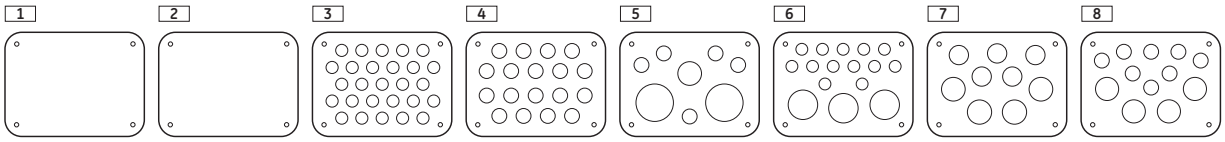

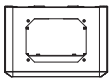

12 modules: 1 entry plate

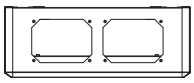

24 modules: 2 entry plates

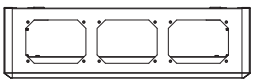

36 modules: 3 entry plates

Floor bases

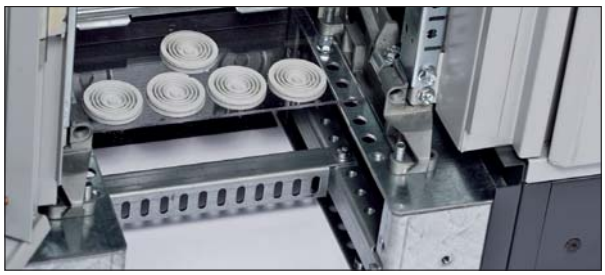

Cable fixation

Separation for floor base

	Ref. No. 12 modules	Ref. No. 24 modules	Ref. No. 36 modules
Floor base height - 100 mm	**885084**	**885085**	**885086**
Horizontal cutted separation (set including cable glands)	**885087**	**885088**	**885089**
Horizontal plain separation (set)	**885090**	**885091**	**885092**
Set of cable fixation	**885093**	**885094**	**885095**

Functional units for modular devices

Content
- DIN rail
- Supports to fix the rear panel profiles
- Coverplate with cut-out
- Blanking plate
- Fixation elements

Functional units for modular devices

	Height (mm)	Ref. No. 12 modules	Ref. No. 24 modules	Ref. No. 36 modules
DIN rail	150	885098	885100	885103
DIN rail	200	885099	885101	885104
DIN rail for Fixwell™ MCB's	150	-	885102	885105
DIN rail + busbar 160A	150	-	885096	885097

Functional units for terminals

Content
- DIN rail adjustable in height
- Supports to fix the rear panel profiles
- Plain coverplate
- Fixation elements

Functional units for terminals

	Height (mm)	Ref. No. 12 modules	Ref. No. 24 modules	Ref. No. 36 modules
1 horizontal DIN rail for terminals (without coverplate)	150	885241	885242	885243
1 horizontal DIN rail for terminals	150	885149	885150	885151
1 vertical DIN rail for terminals (*)	900	885152	-	-
3/4 vertical DIN rails for terminals(**)	300	-	885153	885154
Earth bar	-	885264*	885138**	885138**

Moduclic plug-in distribution system

Moduclic is a secondary plug-in distribution system of 250A, 660V~ 60kA peak. Moduclic is a busbar for modular devices and this as well for MCB's as for comfort functions. Moduclic is mounted directly on the DIN-rail and is **independent** the type of **system enclosure**: Quixtra or VP-System.
The main advantage of Moduclic is the **safety** aspect (IP20): adding or **removing** electrical circuits in a panel board **without disconnecting** the power. All outgoing circuits stay in the operational function, due to the fact that all operations are done using the **insulated click connection**, without touching the life parts, even not when using an insulated tool.
Standard connections of 6 mm² (up to 40A) are shipped with Moduclic. The Moduclic distribution system is suitable for integration in **all system enclosures** conform to **IEC 60439-1**

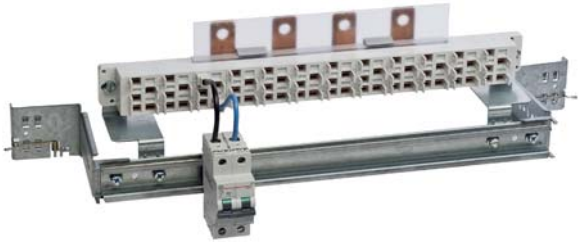

24 and 36 modules - 3P+2N - IP20

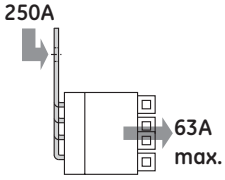

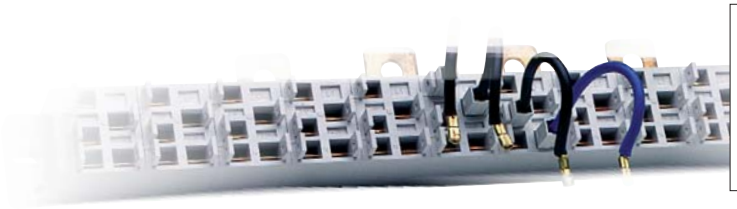

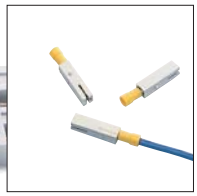

Moduclic distribution system

Description	Cables	Cable section (mm²)	Cable length (mm)	Ref. No.	Pack
Moduclic 24 modules 3P+2N + cables 3P+N				880884	1
	18 black cables	6	120		
	6 blue cables	6	120		
Moduclic 24 modules 3P+2N + cables mono				880885	1
	12 black cables	6	120		
	12 blue cables	6	120		
Moduclic 24 modules 3P+2N without cables		-	-	880886	1
Moduclic 36 modules 3P+2N + cable 3P+N				885265	1
	27 black cables	6	120		
	9 blue cables	6	120		
Moduclic 36 modules 3P+2N + cables mono				885266	1
	18 black cables	6	120		
	18 blue cables	6	120		
Moduclic 36 modules 3P+2N without cables		-	-	885267	1
Cables with end connector					
	6 black cables	6	120	880887	1
	6 blue cables	6	120	880888	1
	6 black cables	10	120	880889	1
	6 blue cables	10	120	880890	1
Stripped cables					
	6 black cables	6	320	880891	1
	6 blue cables	6	320	880892	1
	6 black cables	10	320	880893	1
	6 blue cables	10	320	880894	1
Cables for 2 x 4P MCB's - 6 black & 2 blue					
	8 cables	6	120	880926	1
	8 cables	10	120	880928	1
	8 cables	6	320	880930	1
	8 cables	10	320	880932	1
Cables for 4 x 2P MCB's - 4 black & 4 blue					
	8 cables	6	120	880927	1
	8 cables	10	120	880929	1
	8 cables	6	320	880931	1
	8 cables	10	320	880933	1
Plugs					
	1.5-2.5 mm² blue, 10 plugs			880895	1
	4-6 mm² yellow, 10 plugs			880896	1

Mounting of Moduclic

On DIN-rail (step = 200 mm)

Direct on busbar (step = 200 mm)

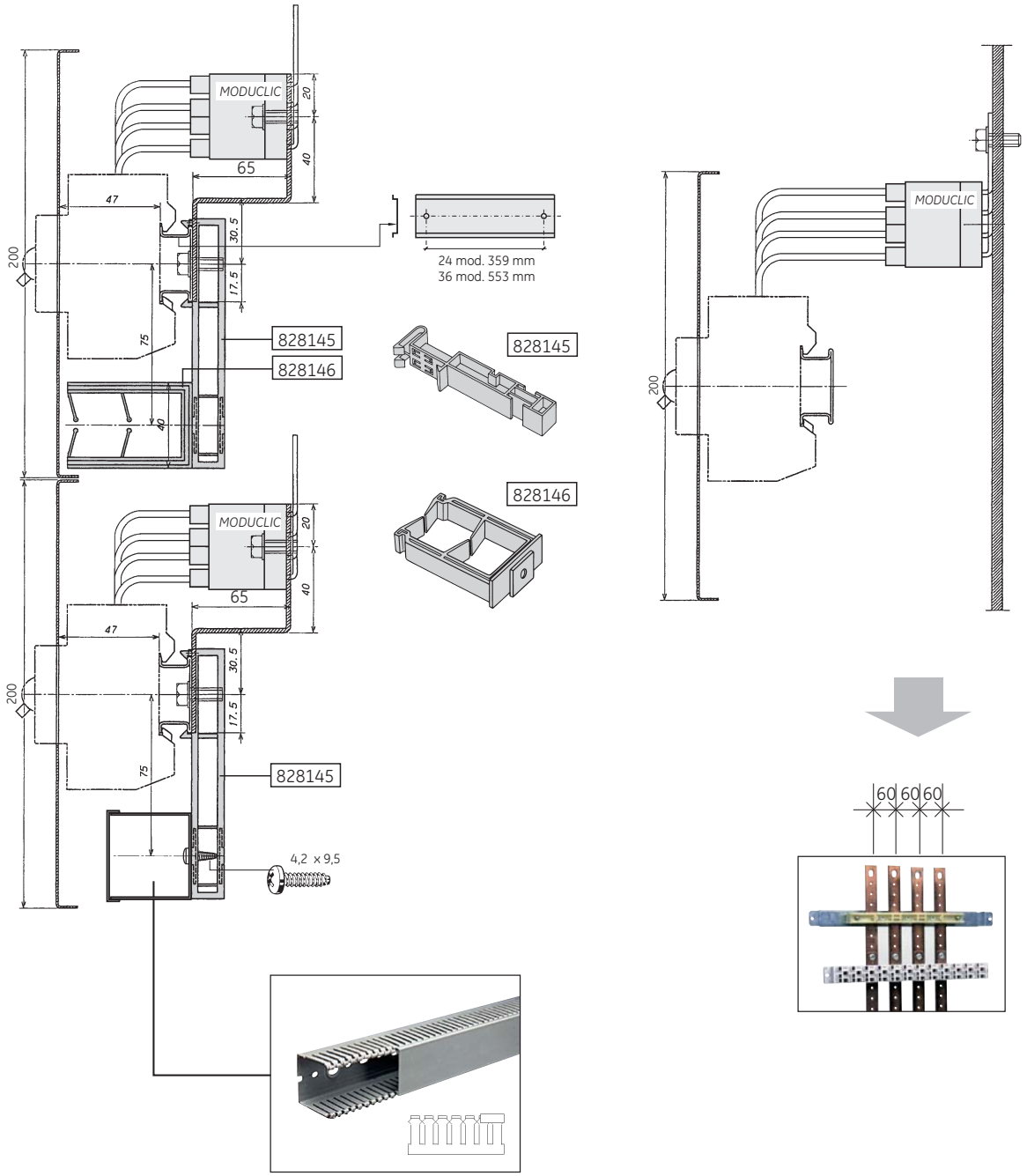

Incoming connections

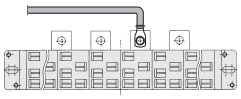

Cable max. 70 mm² - 170A

Flexibar 3 x 20 x 1 - 250A

Functional units for MCCB's - Record Plus

Content
- Mounting plate
- Supports to fix to the rear panel profiles
- Coverplate with cut-out
- Fixation elements

Horizontal assembly

Record Plus frame size	In (A)	Poles	RCD position	Height (mm)	# MCCB's	Ref. No.	# MCCB's	Ref. No.	# MCCB's	Ref. No.
					12 modules		24 modules		36 modules	
FD	160	3/4 poles	-	150	-	-	1	885117	-	-
FD+RCD	160	3 poles	Bottom	150	-	-	1	885114	-	-
FD+RCD	160	4 poles	Bottom	150	-	-	1	885115	-	-
FE	250	3/4 poles	-	200	-	-	1	885121	1	885131
FE+RCD	250	3/4 poles	Bottom	200	-	-	1	885119	1	885130
FG	630	3 poles	-	300	-	-	-	-	1	885134
FG	630	4 poles	-	300	-	-	-	-	1	885135
FG +RCD	630	3 poles	Bottom	300	-	-	-	-	1	885132
FG +RCD	630	4 poles	Bottom	300	-	-	-	-	1	885133

Vertical assembly

Record Plus frame size	In (A)	Poles	RCD position	Height (mm)	# MCCB's	Ref. No.	# MCCB's	Ref. No.	# MCCB's	Ref. No.
					12 modules		24 modules		36 modules	
FD	160	3/4 poles	-	300/250(1)	1	885107	4	885116	6	885127
FD+RCD	160	3/4 poles	Lateral	300/250(1)	1	885106	2	885116	3	885127
FE	250	3/4 poles	-	450	1	885109	3	885120	4	885129
FE+RCD	250	3/4 poles	Bottom	600	1	885108	3	885118	4	885128
FG	630	3 poles	-	600	1	885112	1	885124	-	-
FG	630	4 poles	-	600	1	885113	1	885125	-	-
FG +RCD	630	3 poles	Bottom	600	1	885110	1	885122	-	-
FG +RCD	630	4 poles	Bottom	600	1	885111	1	885123	-	-

(1) Height 300 mm in 12 modules
Height 250 mm in 24 and 36 modules.

Distribution terminals for Record Plus

Especially designed to allow the use of the moulded case circuit breaker Record Plus FE frame as a mains device with cables distributing the load over multiple outgoing circuits (or lines of multiple outgoing circuits).
The terminals are available as a three or four pole set allowing the line or load side of the breaker to be equipped. The sets consist of a number of fully insulated single pole units that can be assembled into a multipole distribution block before they are mounted on the breaker.

External connectors
Connector 6 copper cable cores 2.5 mm² up to 35 mm²
Set for equipping the line or load side of a breaker

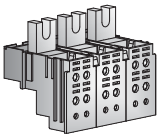

Frame size	Conductors	Size of conductors	Strippable length	Max. torque on lug bolt
FE160/250	max. 6	4 x 2.5 - 35 mm²	12 mm	6 Nm
	-	2 x 2.5 - 16 mm²	12 mm	3 Nm

External connectors

	Ref. No.	Pack
Set 3 pole	880954	1
Set 4 pole	880955	1

Functional units for loadbreak disconnectors - Dilos

Content
- Mounting plate
- Supports to fix to the rear panel profiles
- Coverplate with cut-out
- Fixation elements

Horizontal assembly

Dilos size	In (A)	Poles	Height (mm)	Ref. No.	Ref. No.	Ref. No.
				12 modules	24 modules	36 modules
Dilos 1H[1]	-	3/4 poles	300	-	885140	-
Dilos 3[1]	250-315	3/4 poles	300	-	885142	885146
Dilos 4[2]	400-630	3/4 poles	450	-	885144	885147

Vertical assembly

Dilos size	In (A)	Poles	Height (mm)	Ref. No.	Ref. No.	Ref. No.
				12 modules	24 modules	36 modules
Dilos 1/2	-	3/4 poles	300	885148	-	-
Dilos 1H[1]	-	3/4 poles	300	885136	885139	-
Dilos 3[1]	250-315	3/4 poles	300	885137	885141	885145
Dilos 4[2]	400-630	3/4 poles	600	-	885143	-

(1) Use handle 730649 or 730650
(2) Use handle 730653

Busbars

Staircase busbars

The staircase busbar can be assembled in vertical position in the 12 modules enclosure and in horizontal position in the 24 and 36 modules enclosures.

- No electrical device can be mounted at the same level as the staircase busbar. Only a blind coverplate should be mounted over it.
- The kits for the vertical busbars include the metal supports to fix the holder in horizontal position in the enclosure.
- The kits for horizontal busbars includes the support to fix the holders in vertical position in the enclosure and all fixation elements.

Staircase busbars holders

	Ref. No. 12 modules	Ref. No. 24 modules	Ref. No. 36 modules
Vertical copper bars (support + isolator)	885197	-	-
Horizontal copper bars (support + isolators)	-	885198	885199

Rear mounted busbars

The rear mounted busbar can be assembled in vertical or in horizontal position in all type of enclosures.
Electrical devices can be mounted over the rear busbars: modular devices, terminals and MCB's Record Plus FD/FE frames[1].

- The kits for the vertical busbars includes the metal supports to fix the holder in horizontal position in the enclosure.
- The kits for horizontal busbars includes the support to fix the holders in vertical position in the enclosure and all fixation elements.

Rear mounted busbars holders

	Ref. No. 12 modules	Ref. No. 24 modules	Ref. No. 36 modules
Vertical copper bars	885191	885192	885193
Horizontal copper bars	885194	885195	885196

(1) In the 12 modules enclosures no devices can be mounted over the rear busbars.

Copper bars
The copper bars are common for the staircase busbars and for the rear mounted busbars.
The cross-section selection should be done based on the table below:
- Rated nominal current (In)
- Rated short-circuit current (Icw)

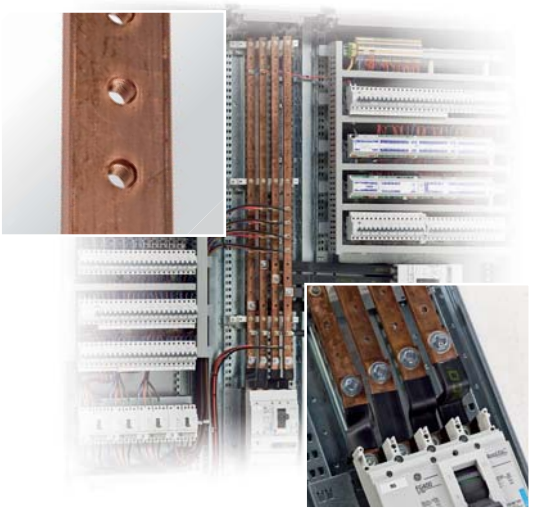

Busbar system

Cross section in mm Phase bar	Neutral bar	Type	Connection[1]	Spacing between supports (mm)[2]	Spacing between busbars (mm)	Max. Current rating Amp	Short-circuit withstand strength Icw (kA) - sec[2]	Ipk (kA)
20x5	20x5	Rear	Plain	300	60	250	17.5 - 0.7	35
30x5	30x5	Rear	Plain	300	60	400	25 - 0.8	50
20x10	20x10	Rear	Plain	300	60	400	20 - 1	40
30x10	30x10	Rear	Plain	300	60	630	30 - 1	63
20x5	20x5	Rear	M6/25	300	60	250	17.5 - 0.35	35
30x5	30x5	Rear	M6/25	300	60	400	25 - 0.35	52.5
20x10	20x10	Rear	M6/25	300	60	400	20 - 0.75	40
30x10	30x10	Rear	M8/25	300	60	630	30 - 0.75	63
20x5	20x5	Staircase	M6/25	300	35	250	20 - 0.35	40
30x5	30x5	Staircase	M6/25	300	35	400	25 - 0.35	52.5
20x10	20x10	Staircase	M6/25	300	35	400	25 - 0.45	52.5
30x10	30x10	Staircase	M8/25	300	35	630	25 - 1	52.5

Copper bars

	Threaded holes[1]	Length (mm)	Ref. No.
Plain copper bar - 20x5mm	no	3000	**858036**
Plain copper bar - 30x5mm	no	3000	**885204**
Plain copper bar - 20x10mm	no	3000	**885205**
Plain copper bar - 30x10mm	no	3000	**885206**
Threaded copper bar - 20x5mm	M6	2000	**885207**
Threaded copper bar - 20x10mm	M6	2000	**885208**
Threaded copper bar - 30x5mm	M6	2000	**885209**
Threaded copper bar - 30x10mm	M8	2000	**885210**
4 threaded copper bars length 1m - 20x5 mm	M6	1000	**880847**
4 threaded copper bars lenght 1m - 32x5 mm	M6	1000	**880850**[3]
4 threaded copper bars lenght 1m - 30x10 mm	M8	1000	**880851**
Fastener bolts			
Bolts M6x16 mm (40 pcs)			**880617**
Bolts M8x20 mm (40 pcs)			**880852**

(1) Distance between holes: 25 mm
(2) Other values on demand
(3) Only for staircase busbar

Flexible copper

	Rated current (A)	Length (mm)	Ref. No.
Flexible copper 6x13x0.5	125	2000	**886530**
Flexible copper 2x20x1	160	2000	**886532**
Flexible copper 3x20x1	250	2000	**828162**
Flexible copper 4x32x1	400	2000	**828163**
Flexible copper connection between Record Plus FG and:			
staircase busbar 400A/630A in cable compartment			**885211**
staircase busbar 400A in cable compartment on **right** side from 36 mod. enclosure			**885289**
staircase busbar 400A in cable compartment on **left** side from 36 mod. enclosure			**885290**
staircase busbar 630A in cable compartment on **right** side from 36 mod. enclosure			**885291**
staircase busbar 630A in cable compartment on **left** side from 36 mod. enclosure			**885292**

Earth bars

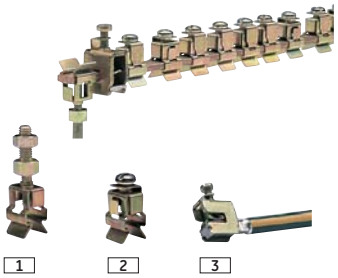

	Ref. No.
Main earth bar 30x10 for enclosure	
12 modules	**885261**
24 modules	**885262**
36 modules	**885263**
Horizontal earth bar 12x4 with connectors	
12 modules	**885225**
24 modules	**885226**
36 modules	**885227**
1 Fixation clips M6 (set of 20 pcs)	**880637**
2 Connectors 16mm² (set of 20 pcs)	**880639**
3 Connectors 35mm² (set of 20 pcs)	**880638**

Protection shrouds

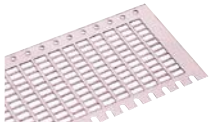

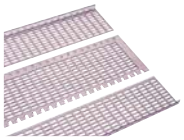

	Ref. No.
Frontal schroud for staircase busbar - length 1000mm	**885200**
Frontal and lateral (2) schrouds for staircase busbar - length 1000mm	**885201**
Top and bottom schroud for staircase busbar	**885202**
Frontal schroud for rear mounted busbar - length 1000mm	
for enclosure 12 modules	**885126**
for enclosure 24 and 36 modules	**885203**

Separation screen Form 2

QuiXtra 630 can be upgraded to internal segregation Form 2 by adding separation screens for the busbars. The vertical separation screen has to be installed between two coupled enclosures, in modules of 150mm.
Form 2 can not be achieved with the rear mounted busbar, if any electrical device is assembled over it.

Form 2 screens

	Ref. No. 12 modules	Ref. No. 24 modules	Ref. No. 36 modules
Vertical separation screen Form 2 - Height 150mm	885212	885212	885212
Horizontal separation screen Form 2	885213	885214	885215

Content
- Isolated screen
- Fixation elements

4 Poles terminals

For DIN rail mounting

Terminals	Ref. No.
4P terminals for DIN rail mounting 63A	610022
4P terminals for DIN rail mounting 80A	880614
4P terminals for DIN rail mounting 125A	880742
4P terminals for DIN rail mounting 160A	610020
Shrouding for 4P terminal 160A	610021

For mounting on horizontal supports

	Ref. No. 12 modules	Ref. No. 24 modules	Ref. No. 36 modules
4P terminal 250A - min. height 200 mm	885217	885220	885223
4P terminal 400A	-	885221	885224

Content
- 4P terminals
- Fixing supports
- Protective plate
- Fixation elements

Cover plates

Blind cover plates
- Blind cover plate
- Fixation elements

Recessed cover plates
- Recessed 30 mm blind cover plate
- Fixation elements

Meter cover plates
- Cover plate with 1 cut-out and 2 or 4 pre-punched cut-outs
- Hinges
- Fixation elements

Push-buttons cover plates
- Cover plate with pre-punched cut-outs for Series P9 push-buttons: 10 in 24 modules and 12 in 36 modules
- Hinges
- Fixation elements

Cover plates

Height (mm)	Description	Ref. No. 12 modules	Ref. No. 24 modules	Ref. No. 36 modules
50	Blind	885166	885167	885168
150	Series P9 push-buttons, 10 or 12 cut-outs	-	885189	885190
150	Blind	885169	885170	885171
150	Meters 4 or 6 cut-outs 72x72	-	885185	885186
150	Meters 3 or 5 cut-outs 96x96	-	885187	885188
150	Cut-out for modular devices	885178	885179	885180
150	Recessed & cut-out for cable glands	-	885181	885182
200	Blind	885172	885173	885174
300	Blind	885175	885176	885177
300	Recessed & cut-out for cable glands	-	885183	885184
600	Blind	885161	-	-
750	Blind	885162	-	-
900	Blind	885163	-	-
1050	Blind	885164	-	-
1200	Blind	885165	-	-

Mounting plates

Height (mm)	Cover plate height (mm)	Ref. No. 12 modules	Ref. No. 24 modules	Ref. No. 36 modules
130	150	885155	885156	885157
280	300	885158	885159	885160

Accessories/spare parts

Description	Ref. No. 12 modules	Ref. No. 24 modules	Ref. No. 36 modules
DIN rail and adjustable brackets	885241	885242	885243
Cable support	885244	885245	885246
Lighting unit - height 50 mm	-	885247	885248
Adhesive label holder	885249	885250	885251
Spreader box for enclosure	885282	885283	885284

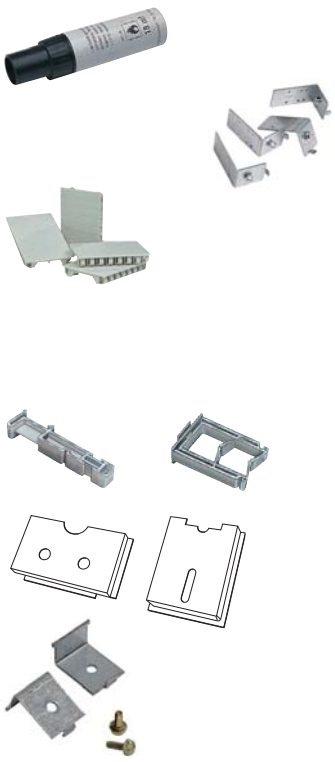

Description	Ref. No.
Paint touch-up kit RAL9006	885252
Paint touch-up kit RAL7024	885253
Support for cable duct - max. width 60 x height 80 (set of 4 pcs)	885254
Blanking strips for 45 mm cut-out - length 1000mm - RAL 7035	828056
Blanking strips for 45 mm cut-out - length 72mm - RAL 7035 (set of 4 pcs)	610142
Vertical wall mounting brackets (set of 4 brackets)	885256
Screw M6x20 (bag of 50)	885257
Screw M8x25 (bag of 50)	885258
Captive washer for M6x20 (bag of 100)	885259
Captive washer for M8x25 (bag of 100)	885260
Cage nut M6 (bag of 100)	885288
Set cable tray support - max. width 40 x height 60 (20 supports)	828145
Set cable tray (10 trays)	828146
Document pocket DIN A5	832000
Document pocket DIN A4	811516
Closing caps for IP43 in backpanel	885286
Hinges for cover plate (set of 2 pcs)	885285
Earthing cable for door	885295
Lifting brackets	885240
IP43 profile 12 modules	885312
IP43 profile 24 modules	885313
IP43 profile 36 modules	885314

Description	Ref. No. 3 - 4 - 5 rows	Ref. No. 6 - 7 - 8 rows	Ref. No. 9 - 10 - 12 rows
Round lock V2432E with key	885300	885304	885308
Round lock 405E with key	885302	885306	885310
Round lock 455E with key	885303	885307	885311

Design and quotations software for QuiXtra 630 and Modula Plus

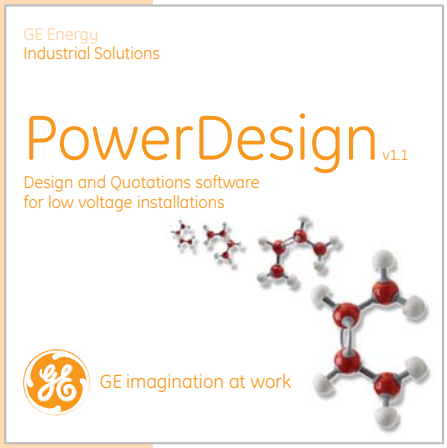

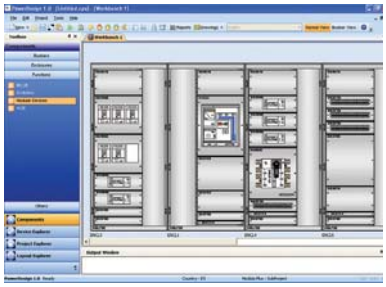

Quotation

- Material cost, kits, devices and busbar placements
- Discount management / Net prices / Assembly time
- Variable costs management: transport, logistics, study and documentation
- Margin calculation

Multiple report selection

- Detailed technical project data
- Front view and busbar view
- Distribution and placement of busbar systems
- Project definition
- Purchase order creation
- Quotations

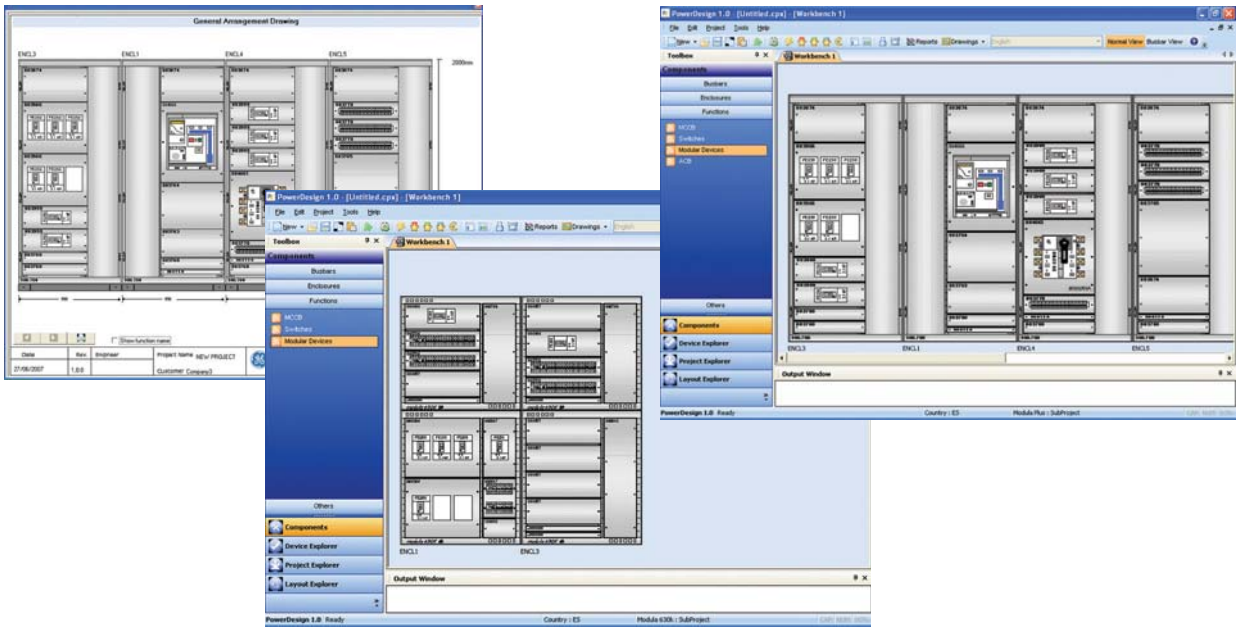

Low voltage distribution boards

Applications

Industry
High commercial
Low commercial

Standards

IEC EN 60439 part 1

Protection degree

With door IP55
Without door IP30 (equipped with functional units and coverplates)

Protection class

Earthing, protection class I

Standard application

Feeder
Air circuit breaker from 400A up to 4000A fixed or withdrawable
Loadbreak switches up to 2500A fixed, fused or fuseless
Moulded case circuit breakers up to 1600A fixed or plug-in
Outgoing circuits
Moulded case circuit breakers up to 1600A fixed or plug-in
Loadbreak switches up to 2500A fixed, fused or fuseless
Miniature circuit breakers

Material

- Cabinet structure sheet steel, thickness 1 mm
- External panel sheet steel, tickness 1.5 mm, powder coated
- Doors sheet steel, thickness 2 mm, powder coated
- Colour

External panel	RAL 7035
Coverplates	RAL 7024
Doors	RAL 7035
Design doors	RAL 7035 and RAL 7024

Technical data

Rated operational voltage Ue 690V
Rated insulation voltage Ui 1000V
Rated frequency 50-60Hz
Rated current of busbar systems
- Horizontal in the top IP55 3400A - ventilated enclosure IP30 4000A
- Vertical busbar IP55 3400A - ventilated enclosure IP30 4000A

Rated short-circuit current
- Thermical (kAeff.) Icw max. 80kA /1s (2000A, IP55)

Mechanical data
- Dimensions:

Height	2000 mm
Depth	500 mm, 700 mm
Width	400 mm, 650 mm, 900 mm

Internal separation
- Form 1, form 2 and form 3

Dimensional drawings ● Page I.30
Specifications for tender documents ● Page I.58
Power dissipation values ● Page I.80

Modula Plus

Safety
- Tested according IEC 60439-1
- Short-circuit proof
- Earth continuity proven

Ease of handling
- Lifting eye bolts are delivered as standard with each enclosure
- Transport segments can be coupled with stable lifting brackets for crane transport

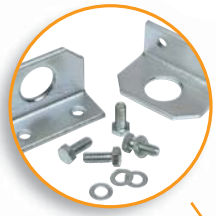

Flexible layout
- Equipment zone
  - width 650mm
  - width 900mm
- Busbar zone
  - in the top
  - lateral
- Cabling zone
  - integrated cable compartment
  - enclosure of 400mm width

Cable entry
- Cable entry plate made of 3 parts included as standard in enclosures of width 650mm and 900mm
- Bases are offered in height of 100mm or 200mm

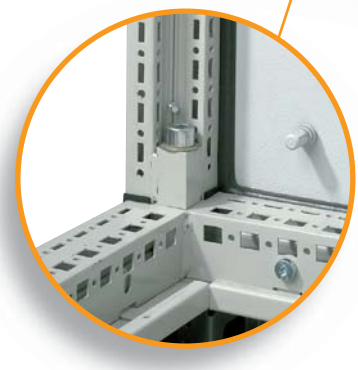

Reliable construction
- Welded top and bottom frame
- Painted frame
- Doors and covers 2mm sheet steel, powder coated

Accessibility
- Door opening angle
  - 130° as standard
  - 180° with transparent and design doors
- Doors can easily be removed
- Removable side and rear panel
- Coverplates can be removed individually

Aesthetics
- Finish in light grey, RAL 7035
- Choice of doors
  - plain sheet steel
  - transparent, with wide area equipped with glass
  - design door

Safety
- IP20 separation shrouds offered to prevent from accidential access to the busbars

Ease of cabling
- Wide lateral cut-outs in mounting plates of functional units
- Integrated or separate cable compartment

Modularity
- Coverplates and functional units offered from height 50mm up to 700mm
- LV devices can be mounted in horizontal or vertical position

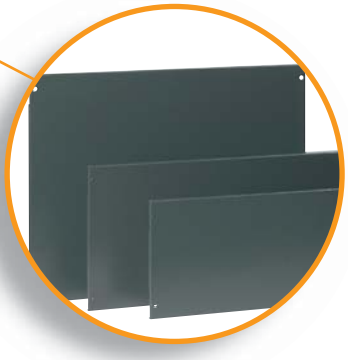

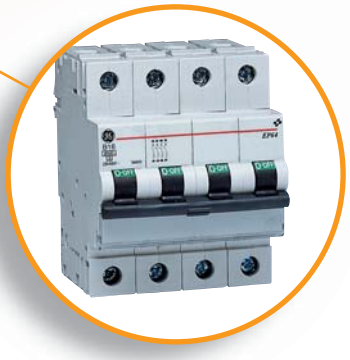

Integrated system
- Modula Plus is developed as an integrated system prepared to receive all kind of GE low voltage devices – in conformity to standards proven by typetesting.

Kit structure

Modula Plus is a range of floor standing system enclosures delivered in kit-form, to be assembled, equipped and wired by panel builder and Installer.

Each enclosure consists of different kits which can easily be selected from the overview below.
An enclosure consists of a welded frame on bottom and top. Vertical uprights are bolted with a central bolt on top and bottom, building the cabinet structure.
In order to be able to receive functional units, a functional frame has to be mounted to the front of enclosures of width 650 and 900mm. Thanks to this functional frame, cover plates and functional units of width 500mm may be fitted into enclosure width 650mm, whereas the enclosure of width 900mm may receive functional units and cover plates of 750mm width.
As alternative, the enclosures of 900mm width can be equipped with a functional frame including an integrated cable compartment. When this option is chosen, the enclosure of 900mm width as well needs to be equipped with functional units of width 500mm.
Rear panel, bases, side panel and doors can be fitted to the enclosure structure to ensure IP degree and good-looking finish.

Overview of the kit structure and a brief description of the content of each kit.

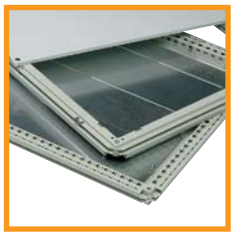

Top and bottom frame
Including roofplate, lifting eye bolts and bottom plate in 3 parts (enclosure width 650mm and 900mm). Includes gasket and parts for maintain IP with enclosures coupled.

Vertical uprights
Set of 4 pieces including fixation material, fixing elements for rear panel, hinges and closing mechanism for door already premounted.

Functional frame
Consisting of two vertical uprights, two horizontal parts in top and bottom and fixation elements.

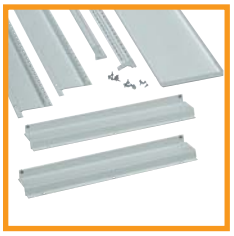

Functional frame with integrated cable compartment
In addition to the content of a standard functional frame, two additional vertical uprights and a cover plate for the cable compartment are included.

External panel
Rear panel (1 piece)
Side panel (set of 2 pieces)
Delivery always includes all required fixation elements.

Doors
Hinges and closing mechanism already pre-mounted to the vertical uprights;
Transparent and design doors are delivered with hinges offering 180° opening angle.

Functional units
Kit of mounting accessories to support low voltage devices.
Content: mounting plates or mounting frames, coverplates with cut-out according to the device, fixation material.

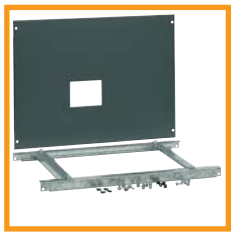

Functional units
Devices with high rated current are supported by stable mounting frames.
Additional depth profiles need to be ordered according to the depth of enclosure.

Cover plates
Content: coverplate, fixation screws, distance holder, metric clips. Coverplates are offered from height 50mm up to 600mm allowing a flexible layout e.g. by providing space between functional units.

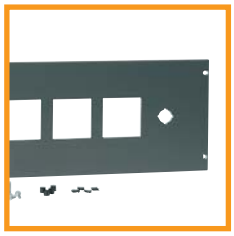

Cover plates for meters
Content: coverplate provided already with cut-outs for meters and change-over switch, fixation screws, 2 hinges, distance holder, metric clips.

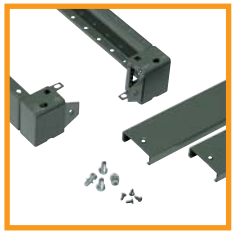

Bases
Each base consists of 4 corner parts and removable covers in front, rear and laterally.
Bases are offered in heigth 100mm or 200mm.

Comfort handle
Handle prepared to receive standard profile half-cylindric lock. The handle can easily be mounted, using same cut-out and fixation screws as the standard double-bit locking mechanism.

Transportation
To move equipped units, a set of reinforced lifting brackets can be used or the lifting eyes. Both delivered as optional accessories

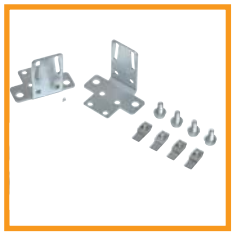

Side connection kit
Set of 4 corner profiles including all fixation screws.
This kit is especially designed for coupling of equipped transport units.

Selection table - Depth 500mm / 700mm

	Width	650mm	900mm	900mm	400mm	650mm	900mm	900mm	400mm	Pack.
				Integrated cable compartm.	Separate cable compartm.			Integrated cable compartm.	Separate cable compartm.	
		Depth 500mm				Depth 700mm				
	Top and bottom frame	884001	884002	884002	884000	884004	884005	884005	884003	1
	Vertical uprights Set of 4 pieces	884006	884006	884006	884006	884006	884006	884006	884006	1
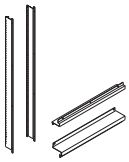	**Functional frame** 	884007	884008	884009	-	884007	884008	884009	-	1
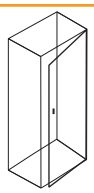	**Functional door**	884080	884079	884080	-	884080	884079	884080	-	1
	Rear panel Incl. fixation material	884011	884012	884012	884010	884011	884012	884012	884010	1
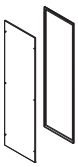	**Side panel** Set of two pieces, incl. fixation material	884013	884013	884013	884013	884014	884014	884014	884014	1
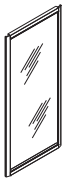	**Doors** - Plain steel, IP55	884019	884020	884020	884018	884019	884020	884020	884018	1
	- Transparent, IP55	884021	884022	884022	-	884021	884022	884022	-	1
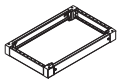	**Base height** 100mm	884027	884028	884028	884026	884030	884031	884031	884029	1
	200mm	884033	884034	884034	884032	884036	884037	884037	884035	1

General accessories

Lifting brackets

884048	1

Set of lifting brackets for safe crane transport of equipped transport sections.
Kit of 2 lifting brackets and fixation material.

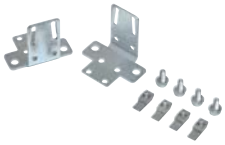

Coupling kit

884049	1

Kit for safe coupling of two enclosures building a transport section.
Set of 4 corner profiles including all fixation material.

Adapter for design and transparent door

884060	1

Adapter to mount comfort handle on design and transparent doors.

Comfort handle

884059	1

Handle prepared to receive standard profile half cylindric lock. Half cylinder profile not included.
This handle is mounted with the standard screws delivered with each door.

Locks - profile half cylinder type

843001	1

With 2 keys, V2432-E

843002	1

With 1 square key, 8mm

843003	1

With 1 triangular key, 8mm

843248	1

With 2 keys A434
Spare keys are available on request

Lifting eyes

884122	1

Set of 4 units

Mounting profiles

Depth profile

Depth 500 mm	884050	1
Depth 700 mm	884051	1

fixed to the functional frame in front and the enclosure structure in the rear.

Depth 500 mm	884052	1
Depth 700 mm	884053	1

can be fixed to the enclosure structure in front and rear.
They are used to mount the vertical busbar in an integrated and separate cable compartment.
Set of two pieces including fixation material

Rear profile

Width 650 mm	884055	1

Profile to fix busbar holder to the rear of an enclosure width 650mm or in an enclosure with integrated cable compartment.

Width 900 mm	884056	1

Profile to fix busbar holder to the rear of an enclosure width 900mm.
Set of two pieces including fixation material.
This profile can be used for both busbar systems up to 630A and 2000A.

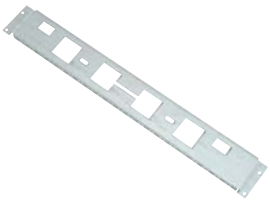

Bottom support for vertical busbars

884054	1

Consists of one L-shape support including fixation material.
This profile is used as well to support a horizontal busbar system in the integrated cable compartment.

Bracket

884057	1

Bracket to mount staircase busbar in an integrated cable compartment.

Bracket

884058	1

Bracket to mount staircase busbar in an separate cable compartment.
Set of two pieces including fixation material.

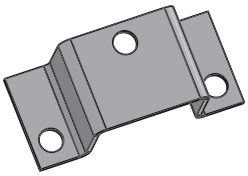

Functional units for modular DIN-rail devices

Functional unit for modular devices includes:
- DIN-rail for mounting the modular equipment
- fixation brackets to attach the DIN-rail to the functional frame
- coverplate with cut-out for DIN-devices
- screws to mount the DIN-rail and the fixation brackets
- screws to fix the cover plate

Dimensions	Ref. No.	Dimensions	Ref. No.	Pack.
Width 500mm (24 modules of 18mm)		Width 750mm (36 modules of 18mm)		
Height 150mm	**883778**	Height 150mm	**883780**	1
Height 200mm	**883779**	Height 200mm	**883781**	1

Brackets for recessed mounting of DIN-rails

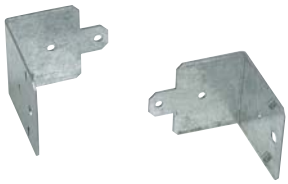

Brackets for recessed DIN-rail

	Ref. No.	Pack.
These brackets allow modification of a standard DIN-rail function to receive MCCBs type Record Plus FD-frame. Set of 2 brackets. (One set needs to be ordered in addition for each function for MCBs: 883778, 883779, 883780 or 883781)	**883998**	1

Height adapter profiles

Profile to mount MCB next to MCCB on a recessed DIN-rail

	Ref. No.	Pack.
Profile of length 1.2 m	**883997**	1
Profile of length 354mm	**617947**	1
Profiles allow mouting of MCBs next to MCCB Record Plus FD-frame on a recessed DIN-rail. (profile of length 354mm allows mounting of 18 or 19 modules next to a MCCB 4 or 3 pole in a functional unit of 24 modules)		

Support for horizontal canalisation (only for use with functional units for modular devices of height 200mm)

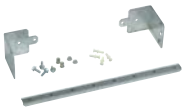

Kit for mounting horizontal cable canalisation up to dimensions 60x40mm
The kit includes:
- horizontal profile supporting the canalisation profile
- lateral mounting brackets for fixation on the functional frame
- screws to fix the horizontal profile and the mounting brackets.

Note: Cable trunking is not included!

	Ref. No.		Ref. No.	Pack.
	Width 500mm		Width 750mm	
Support	**883766**	Support	**883776**	1

Functional units for terminals

Functional unit for terminals includes:
- DIN-rail for the terminals
- fixation brackets to attach the DIN-rail to the functional frame
- plain cover plate
- screws to mount the DIN-rail and the fixation brackets
- screws to fix the cover plate

Dimensions	Ref. No.	Dimensions	Ref. No.	Pack.
Width 500mm (24 modules of 18mm)		Width 750mm (36 modules of 18mm)		
Height 150mm	**883767**	Height 150mm	**883777**	1

Cover plates for meters

Each kit includes a coverpanel with cut-outs, fixation screws and two hinges.

500 x 200 – for 4 meters 72x72mm	**883782**	750 x 200 – for 4 meters 72x72mm	**883788**	1
500 x 200 – for 2 meters 72x72mm	**883783**	750 x 200 – for 2 meters 72x72mm	**883789**	1
500 x 200 – for 4 meters 96x96mm	**883861**	750 x 200 – for 4 meters 96x96mm	**883863**	1
500 x 200 – for 2 meters 96x96mm	**883862**	750 x 200 – for 2 meters 96x96mm	**883864**	1

Blind cover plates

Each kit includes a plain coverpanel and fixation screws.

500 x 50mm	**883759**	750 x 50mm	**883769**	1
500 x 100mm	**883760**	750 x 100mm	**883770**	1
500 x 150mm	**883761**	750 x 150mm	**883771**	1
500 x 200mm	**883762**	750 x 200mm	**883772**	1
500 x 250mm	**883763**	750 x 250mm	**883773**	1
500 x 300mm	**883874**	750 x 300mm	**883878**	1
500 x 400mm	**883764**	750 x 400mm	**883774**	1
500 x 600mm	**883765**	750 x 600mm	**883775**	1

Recessed cover plates (40mm)

Each kit includes a plain coverpanel and fixation screws.
The coverplate is recessed by 40mm and enlarges the space between cover plate and door from 93mm to 133mm.

500 x 300mm	**883943**	750 x 300mm	**883944**	1

Ventilated cover plates

S = cross section of total ventilation surface.

Each kit includes a plain cover panel and fixation screws.

500 x 200mm S = 120 cm^2	**883758**	750 x 200mm S = 185 cm^2	**883768**	1

Mounting plates

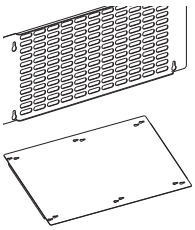

Perforated

Plain

Height	Width	Perforated	Ref. No.	Pack.
200 mm	500 mm	no	**884081**	1
400 mm	500 mm	no	**884082**	1
600 mm	500 mm	no	**884083**	1
200 mm	500 mm	yes	**884084**	1
200 mm	750 mm	no	**884085**	1
400 mm	750 mm	no	**884085**	1
600 mm	750 mm	no	**884087**	1
200 mm	750 mm	yes	**884088**	1

To assembly the mounting plates, 2 sets of depth profiles are necessary:
- Depth 500mm with functional chassis: 2 x 884051
- Depth 700mm with functional chassis: 2 x 884052

Blind cover plate not included. Brackets included.

Functional units for MCCB Record Plus without RCD

All breakers with manual operation

Functional unit for MCCB type Record Plus includes:
- Mounting plate for the breaker
- cover plate with cut-out
- screws to fix the mounting plate on the functional frame
- screws to fix the cover plate

Note: a covering profile to fill the cut-out in the cover plate is included in every functional unit for 3 breaker.

Functional unit to mount moulded case circuit breaker type Record Plus

Note: all functional units allow front or rear connection of the breaker.

Functional units for MCCB type Record Plus FK1600 includes:
- Frame to mount the breaker
- cover plate with cut-out
- screws to fixt the mounting frame on the functional frame
- screws to fix the cover plate

Depth profile to mount a functional unit type Record Plus FK1600 in horizontal position.
Two set of depth profiles need to be ordered with every functional unit depending on the depth of the enclosure.

	Ref. No. of functional unit	Breaker type 3pole / 4pole	Mounting position	Qty of breaker	Height mm	Pack.
FD160	Width 500mm					
	883950	FD160	horizontal	1	150	1
	883957	FD160	vertical	4	250	1
	Width 750mm					
	883955	FD160	horizontal	1	150	1
	883958	FD160	vertical	6	250	1
FE250	Width 500mm					
	883959	FE250	horizontal	1	200	1
	883966	FE250	vertical	3	450	1
	Width 750mm					
	883964	FE250	horizontal	1	200	1
	883968	FE250	vertical	3	450	1
FG630	Width 500mm					
	883973	FG630/3pole	horizontal	1	250	1
	883975	FG630/4pole	horizontal	1	250	1
	883987	FG630/3pole	vertical	1	600	1
	883989	FG630/4pole	vertical	1	600	1
	Width 750mm					
	883983	FG630/3pole	horizontal	1	250	1
	883985	FG630/4pole	horizontal	1	250	1
	883991	FG630/3pole	vertical	1	600	1
	883993	FG630/4pole	vertical	1	600	1
FK1600	Width 500mm					
	884073 (1)	FK1600	horizontal	1	400	1
	884074 (1)	FK1600	vertical	1	600	1
	Width 750mm					
	884075 (1)	FK1600	vertical	1	600	1

(1) MCCB type Record Plus FK1600 are fixed on a mounting frame.
For mounting the frame into an enclosure, always two set of depth profiles need to be ordered according to the depth of enclosure.
e.g. For FK 1600, horizontally mounted in enclosure
Depth 500mm: 884073 + 2 x 884050
Depth 700mm: 884703 + 2 x 884051

All functional units fit in enclosure depth 500mm and depth 700mm.

Accessories

Plastic cable binder support

883996	1

Set of 24 pieces

These supports can be fitted to each functional unit for MCCB Record Plus up to FG frame (630A)

Cover profile

883970	1

Cover profile for standard cut-outs of 65mm for Record Plus breaker FD and FE frame.

L = 1.2 m

Functional units for MCCB Record Plus with RCD

All breakers with manual operation

Functional unit for MCCB type Record Plus includes:
- Mounting plate for the breaker
- cover plate with cut-out
- screws to fix the mounting plate on the functional frame
- screws to fix the cover plate

Note: a covering profile to fill the cut-out in the cover plate is included in every functional unit for 3 breaker.

Functional unit to mount moulded case circuit breaker type Record Plus

Note: all functional units allow front or rear connection of the breaker.

	Ref. No. of functional unit	Breaker type 3pole / 4pole	Mounting position	Qty of breaker	Height mm	Pack.
FD160	Width 500mm					
	883951	FD160	horizontal	1 (1)	250	1
	883957	FD160	vertical	2 (1)	250	1
	Width 750mm					
	883956	FD160	horizontal	1 (1)	250	1
	883958	FD160	vertical	3 (1)	250	1
FE250	Width 500mm					
	883960	FE250	horizontal	1	200	1
	883967	FE250	vertical	3	600	1
	Width 750mm					
	883965	FE250	horizontal	1	200	1
	883969	FE250	vertical	3	600	1
FG630	Width 500mm					
	883974	FG630/3pole	horizontal	1	250	1
	883976	FG630/4pole	horizontal	1	250	1
	883988	FG630/3pole	vertical	1	600 (2)	1
	883990	FG630/4pole	vertical	1	600 (2)	1
	Width 750mm					
	883984	FG630/3pole	horizontal	1	250	1
	883986	FG630/4pole	horizontal	1	250	1
	883992	FG630/3pole	vertical	1	600 (2)	1
	883994	FG630/4pole	vertical	1	600 (2)	1

(1) Record Plus FD-frame with lateral RCD, mounted without standard connection kit.
(2) It is advisible to foresee 150mm of cabling space underneath the function.

All functional units fit in enclosure depth 500mm and depth 700mm.

Accessories

Plastic cable binder support

883996	1

Set of 24 pieces

These supports can be fitted to each functional unit for MCCB Record Plus up to FG frame (630A)

Cover profile

883970	1

Cover profile for standard cut-outs of 65mm for Record Plus breaker FD and FE frame.

L = 1.2m

Functional units for MCCB Record Plus

Plug-in, all breakers with manual operation

	Ref. No. of functional unit	Breaker type 3pole / 4pole	Mounting position	Qty of breaker	Height mm	Pack.
	Width 500mm					
FD160	883952	FD160	horizontal	1	150	1
FE250	883961	FE250	horizontal	1	200	1
FE250 – with RCD	883972	FE250	horizontal	1	200	1
FG630	883977	FG630/3 pole	horizontal	1	250	1
	883979	FG630/4 pole	horizontal	1	250	1

Rotary operation

	Width 500mm					
FD160 – without RCD	883953	FD160/rotary handle	horizontal	1	150	1
FD160 – with RCD	883954	FD160/rotary handle	horizontal	1	250	1
FE250 – without or with RCD	883962	FE250/rotary handle	horizontal	1	200	1
FG630 – without or with RCD	883981	FG630/rotary handle	horizontal	1	300	1
FK1600 – without RCD	884076 (1)	FK1600/rotary handle	horizontal	1	400	1

Motor operation

	Width 500mm					
FD160 – without RCD	883953	FD160/motor operation	horizontal	1	150	1
FD160 – with RCD	883954	FD160/motor operation	horizontal	1	250	1
FE250 – without or with RCD	883963	FE250/motor operation	horizontal	1	200	1
FG630 – without or with RCD	883982 (1)	FG630/motor operation	horizontal	1	300	1
FK1600 – without RCD	884077 (1)	FK1600/motor operation	horizontal	1	400	1

(1) MCCB type Record Plus FG630 in horizontal position and FK1600 are fixed on a mounting frame.
For mounting the frame into an enclosure, always two set of depth profiles need to be ordered according to the depth of the enclosure.
e.g. For FG630, motor operation in enclosure
Depth 500mm: 883982 + 2 x 884050
Depth 700mm: 883982 + 2 x 884051

All functional units fit in enclosure depth 500mm and depth 700mm.

Cosmos functional unit for MCCB Record Plus FD and FE

Assembly on copper bars type Cosmos - Vertical mounting

Ref. No.	Height	Width	Cut out	Maximum number of Record Plus breakers
883999	300 mm	500 mm	433 x 66 mm	Type FD 3P = 5 4P = 3 Type FE 3P = 4 4P = 3

Functional units for disconnector loadbreak switches DILOS

All switches with rotary handle

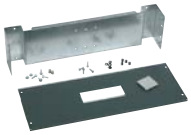

Functional unit for load-break switches type DILOS includes:
- mounting plate for the breaker
- cover plate with cut-out
- screws to fix the mounting plate on the functional frame
- screws to fix the cover plate

Functional unit to mount loadbreak switches in a system enclosure type Modula Plus.

Functional unit to for loadbreak switches type DILOS 4, 6S, 7S and 8S include:
- mounting frame for the breaker
- cover plate with cut-outs
- screws to assemble the mounting frame
- screws for the cover plate

Note: depth profiles always have to be ordered separately according to the enclosure depth.

	Ref. No. of functional unit	Breaker type 3pole / 4pole	Mounting position	Qty of breaker	Height mm	Pack.
	Width 500mm					
40 up to 125A	**883851**	DILOS 1	vertical	1	200	1
	883852	DILOS 1H	vertical	1	300	1
160 up to 200A	**883851**	DILOS 2	vertical	1	200	1
160 up to 315 A	**883853**	DILOS 3	horizontal	1	250	1
	883854	DILOS 3	vertical	1	300	1
400 up to 630A	**883855** (1)	DILOS 4	horizontal	1	400	1
	883856 (1)	DILOS 4	vertical	1	600	1
800 up to 1250 A – 35kA	**884061** (1)	DILOS 6S	horizontal	1	600	1
	884062 (1)	DILOS 6S	vertical	1	450	1
	Width 750mm					
800 up to 1250 A – 50kA	**884063** (1)	DILOS 6S	horizontal	1	700	1
	884064 (1)	DILOS 6S	vertical	1	600	1
1600 up to 2500 A – 50kA	**884063** (1)	DILOS 7S/8S	horizontal	1	700	1
	884064 (1)	DILOS 7S/8S	vertical	1	600	1

(1) Loadbreak switches type DILOS 4, 6S, 7S, 8S are fixed on a mounting frame.
For mounting the frame into an enclosure, always two sets of depth profiles need to be ordered according to the depth of the enclosure.
e.g. For DILOS 4 horizontally mounted:
Depth 500mm : 883855 + 2 x 884050
Depth 700mm : 883855 + 2 x 884051

All functional units, except DILOS 7S/8S in horizontal position (884063), can be mounted in both depth 500mm and depth 700mm.
884063 requires an enclosure of 700mm depth.

Functional units for disconnector loadbreak switches FULOS

All switches with rotary handle

A functional unit for fused loadbreak switches type FULOS includes:
- mounting frame for the breaker.
- cover plate with cut-outs
- screws to assemble the mounting frame
- screws for the cover plate

Note: depth profiles always have to be ordered separately according to the enclosure depth.

Depth profile to mount a functional unit type FULOS 1 – FULOS 3S. Two sets of depth profiles need to be ordered with every functional unit depending on the depth of the enclosure.

	Ref. No. of functional unit	Breaker type 3pole/4pole	Mounting position	Qty of breaker	Height mm	Pack.
	Width 500mm					
42 up to 160A	**883857**	FULOS 000/FULOS 00/FULOS 0	horizontal	1	250	1
250 up to 400A	**883859** (1)	FULOS 1/FULOS 2	horizontal	1	400	1
630A	**884061** (1)	FULOS 3S (DIN)	horizontal	1	600	1
	884062 (1)	FULOS 3S (DIN)	vertical	1	450	1

(1) Loadbreak switches type FULOS 2-3S are fixed on a mounting frame.
For mounting the frame into an enclosure, always two sets of depth profiles need to be ordered according to the depth of the enclosure.
e.g. For FULOS 2 horizontally mounted:
Depth 500mm : 883859 + 2 x 884050
Depth 700mm : 883859 + 2 x 884051

All functional units fit in enclosure depth 500mm and depth 700mm.

Functional units for automatic changeover switches Record

All breakers with motor operation

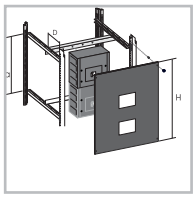

Functional unit for automatic changeover switches includes:
- mounting frame for the breaker.
- cover plate with cut-outs
- Screws to assemble the mounting frame
- screws for the cover plate

Note: depth profiles always have to be ordered separately according to the enclosure depth.

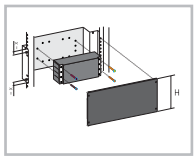

Functional unit for automatic controller for changeover switches type Record.

Type Record Plus	Reference number	Type handle	Number of poles	Number of breakers	Height mm	Emb.
FE-FE	**884093**	Rotary handle	3P	2	600	1
FE-FE	**884119**		4P	2	600	1
FG-FG	**884094**		3P/4P	2	600	1
FE-FG	**884095**		3P	2	600	1
FE-FG	**884120**		4P	2	600	1
FK-FK	**884096**		3P/4P	2	700	1
FK-FG	**884097**		3P/4P	2	700	1
FE-FE	**884098**	Motor operated	3P/4P	2	600	1
FG-FG	**884099**		3P/4P	2	600	1
FE-FG	**884115**		3P	2	600	1
FE-FG	**884121**		4P	2	600	1
FK-FK	**884101**		3P/4P	2	700	1
FK-FG	**884102**		3P/4P	2	700	1
Hinged cover-plate for automatic controller for changeover switches H = 250mm	**872350**		3P/4P	2	250	1

(1) Changeover switches type Record are fixed on a mounting frame.
For mounting the frame into an enclosure, always two sets of depth profiles need to be ordered according to the depth of the enclosure.
e.g. For a changeover functional unit with breaker size 250A:
Depth 500mm : 883846 + 2 x 884050
Depth 700mm : 883846 + 2 x 884051
All functional units, except Record D1250 IDS (883849), can be mounted in both depth 500mm and depth 700mm.
The unit 883849 requires an enclosure of 700mm depth.

Cosmos functional unit for industrial fuses

Assembly on copper bars type Cosmos - Vertical mounting

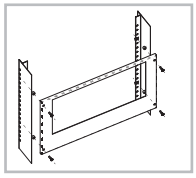

Ref. No	Height	Width	Cut-out
884078	300 mm	500 mm	421 x 195 mm

Functional units for air circuit breaker M-Pact Plus and EntelliGuard

Functional unit for ACB type M-Pact Plus includes:
- mounting frame for the breaker
- cover plate with cut-out
- screws to assemble the mounting frame
- screws to fix the cover plate

Note: a set of depth profiles always needs to be ordered separately according to the enclosure depth

Functional unit to mount ACB in a system enclosure type Modula Plus.

	Ref. No. of functional unit	Breaker type 3pole / 4pole	Mounting position	Qty of breaker	Height mm	Pack.
	Width 500 mm					
800A up to 2000A	884065(1)	M-Pact Plus frame 1	vertical	fixed	700	1
	884066(1)	M-Pact Plus frame 1	vertical	withdrawable	700	1
	Width 750 mm					
800A up to 4000A	884067(1)	M-Pact Plus frame 1/2	vertical	fixed	700	1
	884068(1)	M-Pact Plus frame 1/2	vertical	withdrawable	700	1
	Width 500 mm					
up to 2000A	884123	EntelliGuard frame 1	vertical	fixed	700	1
	884124	EntelliGuard frame 2	vertical	withdrawable	700	1
	Width 500 mm					
up to 4000A	884125	EntelliGuard frame 1	vertical	fixed	700	1
	884128	EntelliGuard frame 2	vertical	withdrawable	700	1

(1) Air circuit breakers type M-Pact Plus and EntelliGuard are fixed on a mounting frame.

For mounting the frame into an enclosure, always one set of depth profiles needs to be ordered according to the depth of the enclosure.
e.g. For M-Pact Plus frame size 1, fixed mounted:
Depth 500mm : 884065 + 1 x 884050
Depth 700mm : 884065 + 1 x 884051

Note: All functional units can be mounted in enclosures with depth 700mm.
The functional unit 884065 and 884123 (M-Pact Plus and EntelliGuard frame size 1 fixed version) can also be fitted in an enclosure of 500mm depth.

Separation form

Enclosures type Modula Plus can be equipped with separation screens Form2 according to standard IEC EN 60439-, which means separation between busbar compartment and functional units with a protection degree of IP2x or IPxxB. Columns with feeder ACB type M-Pact Plus can be equipped with separation screens up to Form 3. The individual separation screens are made of polypropylene (self-extinguishing) with a thickness of 3mm.

Horizontal separation screens Form 2 - Separation between horizontal busbar and functional units

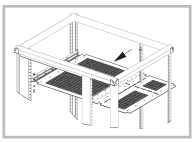

Horizontal separation screens includes:
- Separation screen
- Fixation screws

Note: horizontal separation screens are fixed to depth profiles of the horizontal busbar in the top. If there is no busbar system, a set of depth profiles needs to be ordered separately according to the enclosure depth

Ref. No. of form separation	Enclosure dimensions	Pack.
884044	Enclosure width 650mm and 900mm (depth 500mm and 700mm)	1
884045	Enclosure width 400mm (depth 500mm and 700mm)	1

Vertical separation screens Form 2 - Separation between lateral busbar and functional units

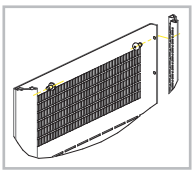

Vertical separation screens includes:
- Separation screen
- Fixation screws

Note: vertical separation screens are fixed directly to the vertical uprights of an enclosure.

884042	Panel depth 500mm	1
884043	Panel depth 700mm	1

Vertical separation screens Form 2 - Separation screen for vertical busbar systems in the rear

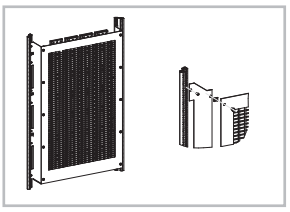

883163	Panel width 650mm and 900mm with integrated cable compartment	1
883164	Panel width 900mm	1

Internal separation Form 3

Separation Form 3 for air circuit breaker - Type M-Pact Plus

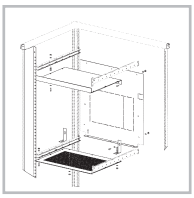

Form 3 separation for ACB type M-Pact Plus includes:
- separation screens IP20
- fixation brackets
- screws to fix brackets and separation screens.

Note: Form 3 separation always requires Form 2 separation for the enclosure where the breaker is installed.
For Form 2 separation please refer to page B.15.

Functional unit to mount ACB in a system enclosure type Modula Plus, Form 3.

Ref. No. of functional unit	Breaker type 3pole/4pole	Mounting type	Pack.
Width 500mm			
M-Pact Plus frame size 1 800A up to 2000A			
884069	M-Pact Plus, frame 1	fixed	1
884070	M-Pact Plus, frame 1	withdrawable	1
Width 750mm			
M-Pact Plus frame size II 800A up to 4000A			
884071	M-Pact Plus, frame 2	fixed	1
884072	M-Pact Plus, frame 2	withdrawable	1

Internal separation Form 3 for MCCB Record Plus

Separation of the functions

Ref. No.		
Width 650 mm		
884091	depth 500 mm	without rear busbars
884089	depth 700 mm	without rear busbars
Width 900 mm		
884092	depth 500 mm	without rear busbars
884090	depth 700 mm	without rear busbars

Notes

Busbars

The busbar system for enclosures range Modula Plus is designed to allow easy installation and combination of horizontal and vertical busbars, whereas the vertical busbar can be located in the back of the enclosure, behind the functional unit or in a lateral busbar compartment.

Nominal current (IP30)

- Horizontal and vertical busbar in a lateral cable compartment:
  - 2140 A in an enclosure of 500mm depth (max. 2 bars per phase)
  - 4000A in an enclosure of 700mm depth (up to 3 bars per phase)

- Vertical busbar in the back of a functional compartment:
  - up to 630A
  - up to 2000A

In addition, there is an option to place a vertical staircase busbar system up to 630A in the lateral cable compartment. The copper bars of this kind of busbar system are arranged in different layers, allowing easy cabling of outgoing devices.

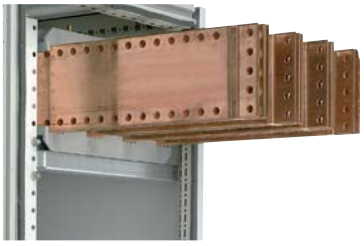

Connection of horizontal and vertical busbar system.

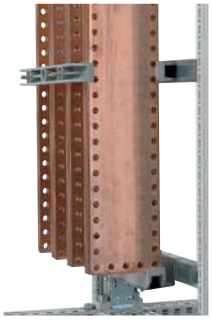

Bottom support for vertical busbar system.

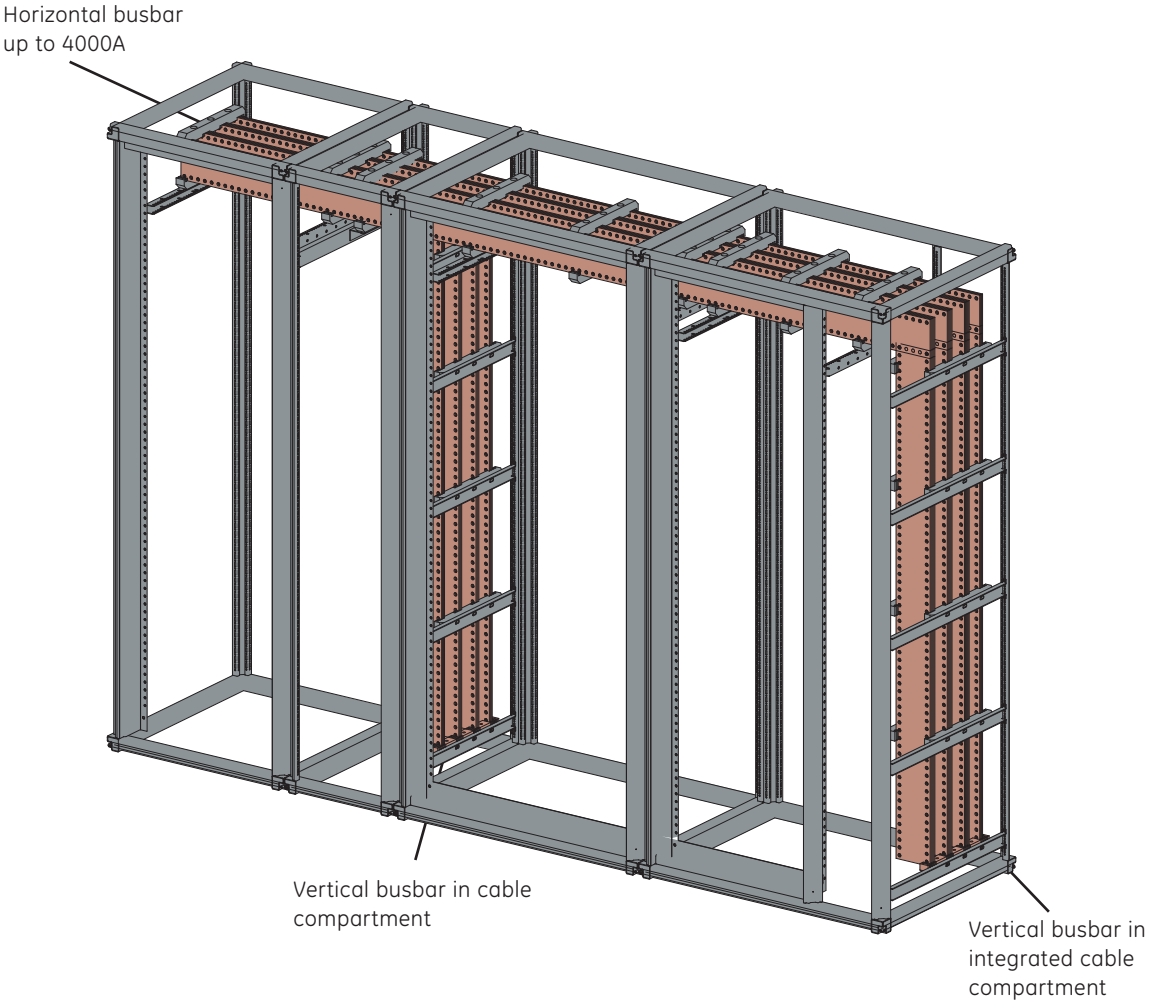

Main busbar system

The main busbar system is based on rectangular copper bars of 5mm thickness and a length of 1650mm.
Each bar has lenghtwise diam. 11mm holes every 25mm on both sides for easy and time saving connections and to fix outgoing cables.
The copper bars are bent on one side for lengthwise or square coupling without any additional connecting plate.

The vertical busbar can be mounted in an integrated lateral busbar compartment at left or right side of an enclosure of 900mm width or in a separate cable and busbar compartment. It is recommended to mount the bottom support of the vertical busbar after defining the exact position of the busbars.

The horizontal busbar system can be mounted at any height of the enclosure Modula Plus and requires a height of 250mm (with copper bars up to 125x5mm) or 300mm (copper bars 160x5mm). The busbars can be front covered by plain cover plates of appropriate height and width.
In enclosures of depth 700mm the space in front of the busbars may as well be used for functional units for terminals or DIN-rail devices.
The supports for the horizontal busbars are the same as for the vertical busbar system.

The busbar supports are fixed to the enclosure by depth profiles, which always need to be ordered separately.

Depth profiles to mount vertical and horizontal busbar

Horizontal busbar in enclosure

The horizontal busbar system is fixed to the functional frame in front and the enclosure structure in the rear with standard depth profiles.

884050	1
Enclosure depth 500mm, set of 2 profiles	
884051	1
Enclosure depth 700mm, set of 2 profiles	

Vertical busbar in integrated or separate cable compartment

The vertical busbar is fixed to the enclosure structure in front and rear by means of following depth profiles.

884052	1
Enclosure depth 500mm, set of 2 profiles	
884053	1
Enclosure depth 700mm, set of 2 profiles	

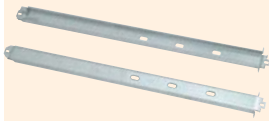

Horizontal busbar

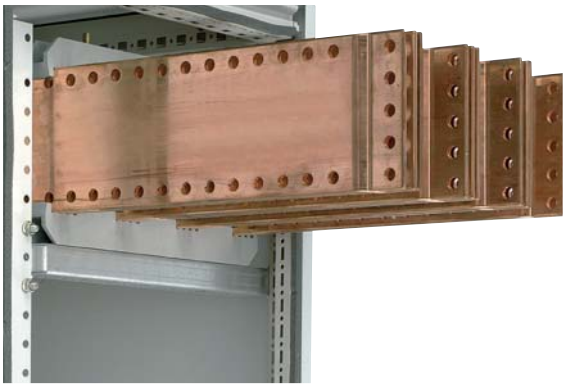

Bottom support for vertical busbar

884054	1

Enclosure depth 500mm and 700mm
The vertical busbar is supported at the bottom by a busbar holder fixed on the depth profiles for the vertical busbar by an additional L-shape profile 884054.
This profile may serve as well to support a horizontal busbar in a cable compartment, where no functional frame is available.

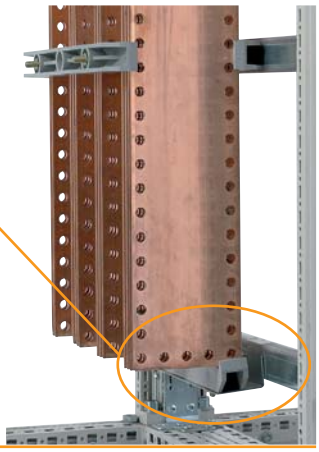

Selection table for horizontal and vertical busbar system

I_N / A IP30	I_N / A IP55	No # L1-L2-L3	No # N	Cu WxD mm	Icw - L 12kA	25kA	35kA	50kA	70kA	80kA	Coverplate H / mm	Ref. No. Busbar L = 1650mm	Ref. No. Busbar support
740	560	1	1	63x5	835	345	270	170	-	-	250	**883663**	**883669**
900	680	1	1	80x5	940	395	305	200	-	-	250	**883664**	**883670**
1080	820	1	1	100x5	1000	450	355	225	155	-	250	**883665**	**883671**
1250	930	2	1	63x5	1000	485	385	245	165	-	250	**883663**	**883669**
1250	980	1	1	125x5	1000	500	395	260	175	-	250	**883666**	**883672**
1835	1350	2	1	100x5	1000	640	500	320	215	-	250	**883665**	**883671**
2140	1600	2	1	125x5	1000	735	570	365	250	-	250	**883666**	**883672**
2800	2000	3	1	125x5	1000	900	720	450	305	250	250	**883666**	**883672**
3500	2600	3	1	160x5	1000	1000	840	530	365	-	300	**883667**	**883673**
4000	3400	4	2	160x5	1000	1000	960	615	420	-	300	**883667**	**883673**

Rear mounted busbar system up to 630A

Enclosures Modula Plus offer an option to use rear mounted busbar system or nominal current up to 630A.

Technical characteristics	
Admissible current	630A in IP30
Cross section of busbars	20 x 5mm
	32 x 5mm
	30 x 10mm
Length of busbars	1000mm

The copper bars have pre-tapped holes M6 or M8 (depending on the cross section of the copper bars) for easy cable connection. The busbar holder guarantees high short-circuit resistance and is fixed to the rear structure of the cabinets by a special mounting profile.
A protective shroud of height 1000mm offers the possibility to cover the whole busbar system, offering internal separation of Form 2.

Example of busbar system 630A, to be mounted in enclosure width 650mm:
- 1 x 880851, 4 copper bars 30 x 10mm
- 3 x 880846, busbar holder
- 2 x 884055, mounting profiles W650mm

Busbar holder

880846	1

Mounting profiles

884055	1
for enclosures W650mm and 900mm with integrated cable compartment	
884056	1
for enclosures W900mm	

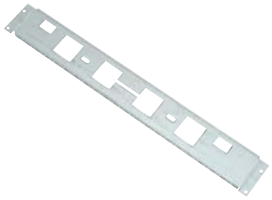

Accessories

Bolts

880617	1
Set of 40 bolts M6x16 for copper bars of 20x5mm and 32x5mm	
880852	1
Set of 40 bolts M8x20 for copper bars of 30x10mm	

Protective shroud

880619	1
530 x 1000mm	

Selection table for rear mounted busbar system

I_N / A		Cu W x D	Tapped holes	Icw - D			Cu L/mm	Ref. No. Cu	Ref. No. Busbar support	W = 650mm	W = 900mm
IP30	IP55			15kA	20kA	30kA					
320	250	20x5	M6	400	300	-	1000	880847	880846	884055	884056
400	360	32x5	M6	675	-	300	1000	880850	880846	884055	884056
630	560	30x10	M8	900	-	450	1000	880851	880846	884055	884056

Lateral busbar system up to 630A

Enclosures Modula Plus can be equipped with busbar system up to 630A located in the lateral cable or busbar compartment at left or right side of the cabinet.

Technical characteristics	
Admissible current	630A in IP30
Cross section of busbars	20 x 5mm
	32 x 5mm
	30 x 10mm
Length of busbars	1000mm

The copper bars have pre-tapped holes M6 or M8 (depending on the cross section of the copper bars) for easy cable connection.

The busbar holder for lateral busbar systems has a staircase shape which eases the cabling of the different phases. Like in the rear mounted busbar systems, the staircase busbar system can be equipped with a protective shroud to prevent from accidential access to life parts, offering internal seggragation of Form 2.

Mounting in Modula Plus:
For mounting a busbar system of 630A in the lateral cable compartment some fixation brackets are required to fix the busbar holder in the rear of the cable compartment.

Staircase busbar holder

880934	1
Set of 4 pcs, 4 pole	
880935	1
1 pc, 4 pole	

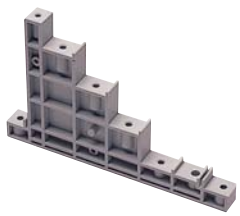

Accessories to mount the staircase busbar in an integrated cable compartment

884058 (1)	1
Mounting brackets, set of 2 pieces (1) please order one set for each busbar support	

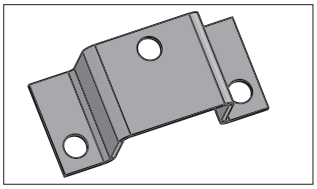

Protection shroud

880936	1
Frontal, IP20	
880937	1
Set of frontal and lateral, IP20	
880938	1
Set of top and bottom	

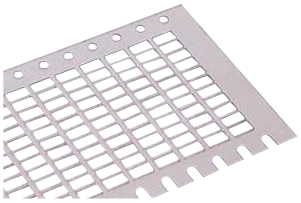

Accessories

Bolts

880617	1
Set of 40 bolts M6x16 for copper bars of 20x5mm and 32x5mm	
880852	1
Set of 40 bolts M8x20 for copper bars of 30x10mm	

Selection table for rear mounted busbar system

I_N / A		Cu W x D	Tapped	Icw - D				Cu	Ref. No.	Ref. No.	Ref. No.	
IP30	IP55	mm	holes	15kA	20kA	25kA	30kA	L/mm	Cu	Busbar support	Mounting bracket	Qty
320	250	20x5	M6	400	300	-	-	1000	**880847**	**880935**	**884058**	2
400	360	32x5	M6	600	400	300	-	1000	**880850**	**880935**	**884058**	2
630	560	30x10	M8	800	600	450	300	1000	**880851**	**880935**	**884058**	2

Earthing busbars

In enclosures Modula Plus horizontal and vertical earthing bars can be realised with copper bars of cross section 32x5mm. The bars have a standard length of 1750mm and are provided with pre-drilled holes on its whole length.
The earth bars are fixed to the functional frame by brackets included in the delivery of the bars.
The vertical bar is bent with an angle of 90° at one side, offering an simple possibility to connect to the horizontal busbar.

Coupling of horizontal and vertical earth bars

Kit for vertical earth bar

883059	1

Kit for vertical earth bar
Containing of one copper bar, L 1750mm, 4 cage nuts and screws for fixing to the functional frame

Kit for horizontal earth bar

883060	1

Kit for horizontal earth bar
Containing one copper bar, L 1750mm, 4 cage nuts and screws for fixing to the functional frame

Possible configuration of busbar systems

The drawing on the right gives an overview of all different kind of busbar configurations which may be implemented in system enclosures Modula Plus:

- rear busbars up to 630A
- rear busbars up to 2000A
- lateral staircase busbars up to 630A
- vertical busbars up to 4000A
- horizontal busbars up to 4000A

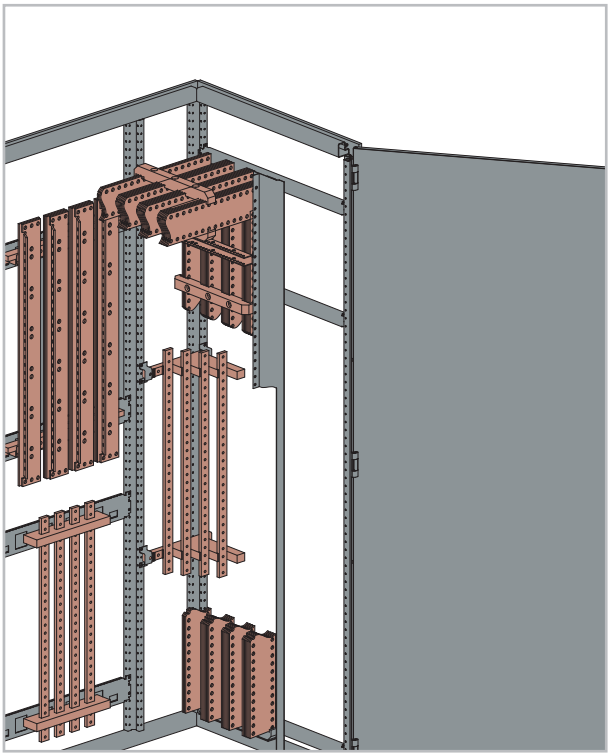

E.5 **EH1** (non-metallic) - Small pedestals
E.6 **EH2** (non-metallic) - Column cabinets
E.8 **EH3** (non-metallic) - DIN-size pedestals
E.14 **EH4** (non-metallic) - Column cabinets
E.16 **EH6** (non-metallic) - Pedestals IP44/54
E.18 **RVS** - Stainless steel pedestals

Overview non-metallic pedestals

EH1 IP43/IP23	EH3/F IP44	EH3/AP IP44	EH3/GD-AP IP23	EH4 IP43	EH6 IP44/IP54
752 x 385 x 270	875 x 590 x 320	875 x 590 x 320	875 x 676 x 424	1600 x 395 x 224	830 x 470 x 320
EH2 IP44	875 x 785 x 320	875 x 785 x 320	875 x 871 x 424	1600 x 495 x 224	830 x 605 x 320
590 x 425 x 240	875 x 1115 x 320	875 x 1115 x 320	875 x 1200 x 424	1600 x 745 x 224	830 x 800 x 320
1347 x 433 x 240	875 x 1445 x 320	875 x 1445 x 320	1125 x 676 x 676	**EH4-S IP44**	
1622 x 433 x 240		1125 x 590 x 320	1125 x 871 x 676	1420 x 320 x 234	
1896 x 433 x 240		1125 x 785 x 320	1125 x 1200 x 676	1850 x 320 x 234	
		1125 x 1115 x 320			
		1125 x 1445 x 320			

H x W x D in mm

Overview stainless steel pedestals

RVS with single door IP43	RVS with double door IP43	RVS with double door and 2 compartments IP43
DIN 00 DIN 0 DIN 1	DIN 2 DIN 3 DIN 4	DIN 2
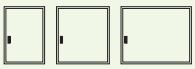 650 x 460 x 355 650 x 595 x 355 650 x 790 x 355	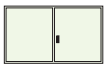 650 x 1120 x 355	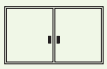 650 x 1120 x 355
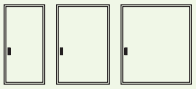 900 x 460 x 355 900 x 595 x 355 900 x 790 x 355	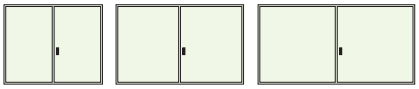 900 x 1120 x 355 900 x 1450 x 355 900 x 1780 x 355	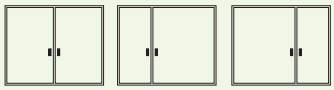 900 x 1120 x 355
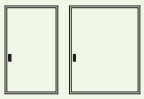 1000 x 595 x 355 1000 x 790 x 355	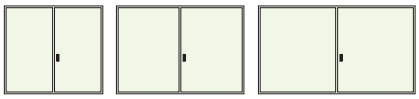 1000 x 1120 x 355 1000 x 1450 x 355 1000 x 1780 x 355	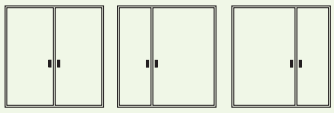 1150 x 1120 x 355
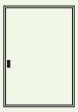 1150 x 790 x 355	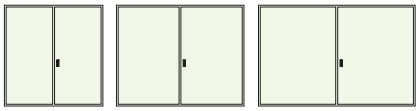 1150 x 1120 x 355 1150 x 1450 x 355 1150 x 1780 x 355	DIN 3 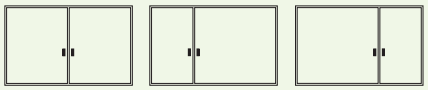 900 x 1450 x 355
	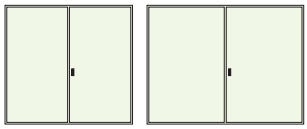 1350 x 1450 x 355 1350 x 1780 x 355	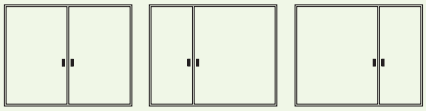 1150 x 1450 x 355

H x W x D in mm

Cabinets for underground cable distribution and all kind of outdoor industrial application

Standards

EN 60439-5

IEC 60439-5

Applications

- Power distribution
- Cable television (CATV) in one or two ways
- Telecommunication and electronics
- Traffic signalling and public lighting
- Temporary service for construction sites
- Camping sites and market places
- Marinas
- Water treatment
- Sub-stations
- 48 cm (19") racking systems

A wide range of pedestals has completed our comprehensive range of non-metallic enclosures for several years. In power distribution application pedestals enable the connection of underground cables and the distribution to several consumers within the cabinets.
Besides there are lots of applications that require reliable outdoor housings like Telecommunication or Traffic signalling.

Features

- Cabinets to be mounted on a plinth.
- The base is partly buried into the ground.
- For some types the base is an integrated part of the pedestals.
- As with all our polyester boxes and cabinets, the pedestal feature high protection and total insulation ⧈ to BS 5486, Part 1 and IEC 60439.
- Degree of protection is at least IP43.
- Very high mechanical impact strength IK10 (EN/IEC 62262) and a high thermal insulation which results in reduced temperature variations within the enclosure.
- All cabinets are corrosion resistant and UV stabilised for outdoor applications.

Applications

- Cable television distribution (CATV)
- Gas distribution
- Telecommunication (surface terminal cabinet)
- Camping sites

Small pedestal

Features

- Small outdoor enclosure with integrated base.
- Hood grey colour RAL 7035
  - ventilated version in polyester or thermoplastic engineering polymer
  - non ventilated version in hot moulded, glass fibre reinforced polyester
  - blackened triangular zamac locking screws, vandalproof and for all seasons
- Degrees of protection:
  - IP43 for the non ventilated hoods
  - IP23 for the ventilated hoods.
    According to IEC 60529 and BS 5490
- Protection degree against external mechanical impacts according to EN/IEC 62262
  - IK09 polyester hood
  - IK10 thermoplastic hood
- Base in high density polyethylene (HDPE) RAL 9005
- Base resists a ground temperature of -50°C
- The upper part of the base serves as a mounting plate and is provided with three slots for fixation points.
- Moulded-in indication of burial depth.
- Easy to install by one person only (weight: 4.5 kg).

Standards

EN 60439-5
IEC 60439-5

EH1 - Pedestal

Type	Ref. No.	Pack.
Ventilated, thermoplastic	**841017**	1
Ventilated, thermoplastic + lock 2432E	**841023**	1
Ventilated, polyester	**841018**	1
Non-ventilated, polyester	**841016**	1
Non-ventilated, polyester + lock 2432E	**841022**	1
Key for triangular screws	**851016**	1

Cable television distribution

Overview of the range ● Page E.2
Dimensional drawings ● Page I.32
Specifications for tender documents ● Page I.58
Power dissipation values ● Page I.82

Column cabinets

Features

- Columns made of hot moulded, glass fibre reinforced polyester.
- Dyed in mass RAL 7035 light grey.
- Protection degree IP44 according to EN 60529, IEC 60529 and BS 5490
- Total insulation ⧈
- Protection degree IK10 against external impacts according to EN/IEC 62262
- Corrosion resistant.
- UV stabilised for outdoor applications, coated version for improved resistance and aesthetics against UV-corrosion.
- Suitable for use in environments from -35° C to +125°C. Temporary exceeding temperatures will not be harmful.
- Fully integrated locking clamp, suitable for operation by a half profile cylindric lock.
- The cylindric lock can be fitted in a recessed lock box, protected by a vandal proof plastic cap.
- The enclosure can be accessed by removing the frontal lift-off segments (not hinged).
- Fixing holes for threaded inserts M6 are provided in the rear panel allowing direct mounting of busbars, a frame, a mounting plate or components. Inserts to fix the mounting plate are already installed.
- The base and the rear panel of the column are molded as one part.
- The base allows for stable installation of the column.
- For easy access to the inside of the cabinet, the hinged roof offers an opening angle of 90°.
- The rainhood shape prevents water stagnation on the roof.

Applications

- Power distribution
- Cable TV distribution (CATV)
- Traffic signalling
- Camping sites
- Pump application

Standards

EN 60439-5
IEC 60439-5

Overview of the range ● Page E.2
Dimensional drawings ● Page I.33
Specifications for tender documents ● Page I.59
Power dissipation values ● Page I.82

EH2 - Column cabinets

	Type	EH2-NA	EH2-NB	EH2-NC	EH2-ND
	H x W x D	1097 x 433 x 240	1347 x 433 x 240	1622 x 433 x 240	1896 x 433 x 240
Standard	Ref. No.	842072	842073	842074	842075
UV coated	Ref. No.	842082	842083	842084	842085
Mounting plate Pertinax with fixing bolts	H x W x D	200 x 395 x 5	450 x 395 x 5	700 x 395 x 5	700 x 395 x 5
	Ref. No.	842002	842000	842001	842001

Accessories

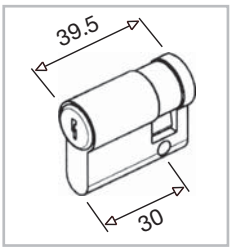

Locks - profile half cylinder type

843001	1	With 2 keys, V2432-E
832022	2	Spare keys for 843001
843002	1	With 1 square key, 8 mm
843003	1	With 1 triangular key, 8 mm
843248	1	With 2 keys A434

Spare keys are available on request.

Filling pellets

422902	1	Pellets made out of clay as humidity barrier between ground and enclosure. Recommended filling height 200-300 mm. DIN 00-1: 1 bag DIN 2-3: 2 bags

Vandal proof nameplate holder

843304	1	Can be placed on every flat surface, by drilling two holes Ø 5.5 mm; the identification window is used as a drill template. Steady against vandalism; it keeps its total isolation. Possibility to write on manually and/or to use the standard letteringsystems; the maximal letterheight is 18 mm. Usefull dimensions of letters: 18 x 143 Outside dimensions: 30 x 183 x 5

Inserts

890846	100	Threaded inserts M6 x 11
852003	1	Special tool for securing threaded inserts M6
842004	1	Support for cable release clamp (to be ordered separately)

DIN-size pedestals

Common features

- Cabinets made of hot moulded, glass fibre reinforced polyester.
- Dyed in mass RAL 7035 light grey.
- Delivered in kit-form or factory assembled.
- Protection degree IP44 according to EN 60529, IEC 60529 and BS 5490
- Total insulation ⧈
- Protection degree IK10 against external impacts according to EN/IEC 62262
- Corrosion resistant.
- UV stabilized for outdoor applications, coated cabinets for increased resistance and aesthetics against UV-corrosion available.
- Suitable for use in environments from -35° C to +125° C. Temporary exceeding temperatures will not be harmful.
- The open door can be manually unhinged to allow free access for maintenance. Door opening angle exceeds 180°.
- Studs are moulded in the rear panel which can receive M8 inserts to allow direct mounting at busbars, a frame or a mounting plare for components.
- Fixation points at the side panel are foreseen to mount busbars.
- Supplied with open bottom.
- To be mounted on a basement according to DIN 43629 standard dimensions between the fixation points.
- The rainhood shape prevents water stagnation on the roof.
- Removable bottom profile for easy cable access without tools.

Applications

- Power distribution
- Water treatment
- Cable television distribution (CATV) in one or two ways
- Photovoltaic
- Camping sites and market places
- Traffic signalling and public lighting

Standards

EN 60439-5
IEC 60439-5

EH3/F

Cabinets with flat surface

- Four sizes in four different widths; all sizes feature the same height and depth.
- Three point locking mechanism, operated by a swing handle.
- The swing handle is designed to receive a half profile cylindric lock.

EH3/AP

Cabinets with anti fly posting surface

- Eight sizes in four different widths and two different heights; all sizes feature the same depth.
- Three point locking mechanism, operated by a solid handle.
- The solid, not recessed handle allows for more usable space inside the cabinet and is designed to receive a half profile cylinder lock.
- Profiled door and rear panels make poster sticking difficult and causes poster to drop off.

Overview of the range ● Page E.2
Dimensional drawings ● Page I.34
Specifications for tender documents ● Page I.59
Power dissipation values ● Page I.83

EH3 - DIN-size pedestals

		DIN 0	DIN 1	DIN 2	DIN 3
Type EH3 / F (H = 875) IP44		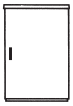	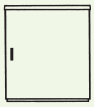	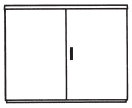	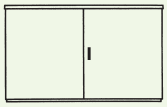
	Type	EH3/F - 0	EH3/F - 1	EH3/F - 2	EH3/F - 3
	H x W x D	875 x 590 x 320	875 x 785 x 320	875 x 1115 x 320	875 x 1445 x 320
Kit-form	Ref. No.	843125	843127	843128	843129
Factory assembled	Ref. No.	843158	843160	843162	843164
Type EH3 / AP (H = 875) IP44		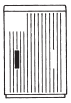		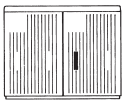	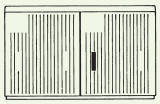
	Type	EH3/AP - 0	EH3/AP - 1	EH3/AP - 2	EH3/AP - 3
	H x W x D	875 x 590 x 320	875 x 785 x 320	875 x 1115 x 320	875 x 1445 x 320
Kit-form	Ref. No.	843150	843151	843152	843153
Factory assembled	Ref. No.	843176	843177	843178	843179
Factory assembled, UV coated	Ref. No.	843480	843481	843482	843483
Fact. assembled, dual cylinder handle	Ref. No.	843313	843314	843315	843316
Type EH3 / AP (H = 1125) IP44					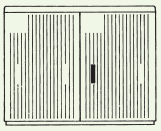
	Type	EH3/AP - 20	EH3/AP - 21	EH3/AP - 22	EH3/AP - 23
	H x W x D	1125 x 590 x 320	1125 x 785 x 320	1125 x 1115 x 320	1125 x 1445 x 320
Kit-form	Ref. No.	843154	843155	843156	843157
Factory assembled	Ref. No.	843180	843181	843182	843183
Factory assembled, UV coated	Ref. No.	843484	843485	843486	843487
Fact. assembled, dual cylinder handle	Ref. No.	843317	843318	843319	843320
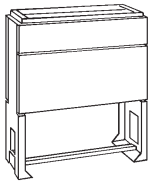 Polyester bases	H x W x D	900 x 585 x 310	900 x 780 x 310	900 x 1110 x 310	900 x 1430 x 310
Kit-form	Ref. No.	842099	842100	842101	843144
Mounting plate Pertinax with fixing bolts Height 875 mm	H x W x D	665 x 485 x 5	665 x 680 x 5	705 x 1000 x 5	705 x 1340 x 5
	Ref. No.	843024	843044	843057	843067
Height 1125 mm	H x W x D	915 x 485 x 5	915 x 680 x 5	915 x 1000 x 5	915 x 1340 x 5
	Ref. No.	843070	843071	843072	843256
	H x W x D		915 x 680 x 10	915 x 1000 x 10	915 x 1340 x 10
	Ref. No.	-	783325(1)	783326(1)	783327(1)
Bottom plate Polyester 3 mm with mounting bolts 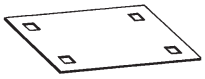	H x W	562 x 285	757 x 285	1086 x 285	1416 x 285
	Ref. No.	843300	843301	843302	843303
Wall fixing unit Two aluminium C-profiles with wall fixing lugs 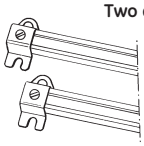	W	710	885	1215	1545
	Ref. No.	843441	843442	843443	843444

(1) Without fixation set, to be ordered separate: 843566 (DIN 1) or 843567 (DIN 2 & 3).

Accessories

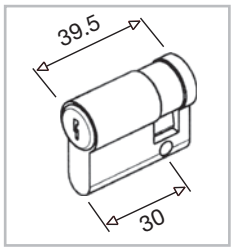

Locks - profile half cylinder type

843001	1
With 2 keys, V2432-E	
832022	2
Spare keys for 843001	
843002	1
With 1 square key, 8 mm	
843003	1
With 1 triangular key, 8 mm	
843248	1
With 2 keys A434	

Spare keys are available on request.

Vandal proof nameplate holder

843304	1

Can be placed on every flat surface, by drilling two holes Ø 5.5 mm; the identification window is used as a drill template.
Steady against vandalism; it keeps its total isolation
Possibility to write on manually and/or to use the standard letteringsystems; the maximal letterheight is 18 mm.
Usefull dimensions of letters: 18 x 143
Outside dimensions: 30 x 183 x 5

Inserts

890845	100

Threaded inserts M8
Type dodge for rear panel and door.

844039	1

Special tool for securing threaded inserts M8

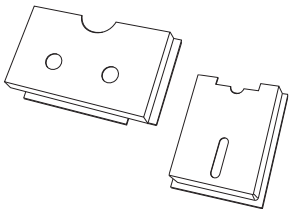

Document pocket

811516	1
DIN A4 - W x H = 325 x 180 mm	
832000	1
DIN A5 - W x H = 155 x 225 mm	

Filling pellets

422902	1

Pellets made out of clay as humidity barrier between ground and enclosure.
Recommended filling height 200-300 mm.
DIN 00-1: 1 bag
DIN 2-3: 2 bags

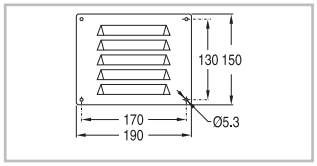

Louvre plate IP44

832019	1

Fits one ventilation opening.
Package includes 2 grids and 4 nylon nails. Total insulation.
RAL 7035

Base for festival execution
with plate slider to close cable opening

846016	1
Size DIN 0 (900 x 585 x 310)	
3 entry plate slider	
846017	1
Size DIN 1 (900 x 780 x 310)	
5 entry plate slider	
846018	1
Size DIN 2 (900 x 1100 x 310)	
7 entry plate slider	

EH3/DC - DIN 2 pedestal with separate compartments

Type EH3/DC - 2	**EH3/DC - 2**
	1125 x 1115 x 320
	843576

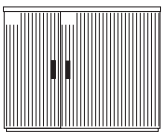

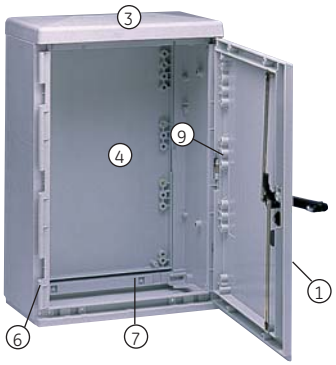

EH3/F (H = 875)

1. Door (with handle)
2. Doorpost
3. Roof
4. Rear panel
5. Middle beam
6. Side panel
7. Bottom profile
8. Support
9. Set hinges

EH3/AP (H = 875)

1. Left door (without handle)
2. Doorpost
3. Roof
4. Rear panel
5. Middle beam
6. Side panel
7. Bottom profile
8. Support
9. Set hinges

10. Set accessories includes all screws, washers and bolts for assembly of the individual polyester parts into a cabinet.

Remark
Spare parts do fit pedestals supplied after 2004 (door opening angle 180°).
Spare parts on request for pedestals supplied before.

EH3 - Spare parts

EH3/F (H = 875)	DIN 0		DIN 1		DIN 2		DIN 3	
	EH3/F - 0		EH3/F - 1		EH3/F - 2		EH3/F - 3	
	left	right	left	right	left	right	left	right
1		843035		843049	843526	843063	843530	843069
2	-		-		843031		843031	
3	843010		843043		843055		843066	
4	843519		843521		843524	843523	843528	843527
5	-		-		843011		843011	
6	843505	843504	843505	843504	843505	843504	843505	843504
7	843515		843516		843517		843518	
8	-		-		-		-	
9	843445		843445		2 x 843445		2 x 843445	
10	843447		843447		843452		843452	

EH3/AP (H = 875)	EH3/AP - 0		EH3/AP - 1		EH3/AP - 2		EH3/AP - 3	
	left	right	left	right	left	right	left	right
1		843101		843104	843538	843108	843542	843369
2	-		-		843031		843031	
3	843010		843043		843055		843066	
4	843531		843533		843536	843535	843540	843539
5	-		-		843011		843011	
6	843505	843504	843505	843504	843505	843504	843505	843504
7	843515		843516		843517		843518	
8	-		-		-		-	
9	843445		843445		2 x 843445		2 x 843445	
10	843447		843447		843452		843452	

For polyester parts with special UV topcoat for prolonged smooth surface of roof, door, rear and side panels, please contact us.

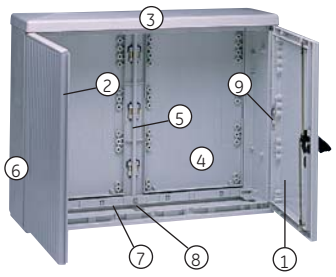

EH3/AP (H = 1125)

1. Door (with handle)
2. Doorpost
3. Roof
4. Rear panel
5. Middle beam
6. Side panel
7. Bottom profile
8. Support
9. Set hinges

10. Set accessories includes all screws, washers and bolts for assembly of the individual polyester parts into a cabinet.

EH3 - Spare parts

EH3/AP (H = 1125)	DIN 0		DIN 1		DIN 2		DIN 3	
	EH3/AP - 20		EH3/AP - 21		EH3/AP - 22		EH3/AP - 23	
	left	right	left	right	left	right	left	right
1		843117		843120	843550	843122	843554	843124
2	-		-		843080		843080	
3	843010		843043		843055		843066	
4	843543		843545		843548	843547	843552	843551
5	-		-		843075		843075	
6	843511	843510	843511	843510	843511	843510	843511	843510
7	843515		843516		843517		843518	
8	-		-		843564		843564	
9	843445		843445		2 x 843445		2 x 843445	
10	843447		843447		843452		843452	

Pedestals with greater depth

Features

- Door, rear and side panels made of hot moulded, glass fibre reinforced polyester.
- Dyed in mass RAL 7035 light grey.
- Rainhood made of hand lay-up glass fibre reinforced polyester.
- Rainhood with RAL 7035 topcoat.
- Six sizes in two heights, two depths and three widths.
- Shipped fully assembled.
- Protection degree IP43 according to EN 60529, IEC 60529 and BS 5490
- Total insulation ⧈
- Protection degree IK10 against external impacts according to EN/IEC 62262
- Corrosion resistant.
- UV stabilized for outdoor applications.
- Suitable for use in environments from -35° C to + 125°C
  Temporary exceeding temperatures will not be harmful.
- Three point locking mechanism, operated by a solid handle.
- The solid, not recessed handle allows for more usable space inside the cabinet and is designed to receive a half profile cylinder lock.
- The open doors can be manually unhinged to allow free access for maintenance.
- Possibility of pivoting door on side or back.
- Threaded inserts for bolts M10 are moulded in the rear panel, allowing for direct mounting of busbars, a frame or a mounting plate for components.
- Supplied with open bottom.
- Provided with fixing points for floor or base mounting.
- The rainhood shape prevents water stagnation on the roof.
- Anti poster surface make poster sticking difficult and causes poster to drop off.

Applications

- Power distribution
- Gas meter units
- Power supply and control units
- Rectifier or inverters
- Generators or transformer stations
- Pumping installations
- 19" rack electronic systems

Standards

EN 60439-5 • IEC 60439-5

Accessories

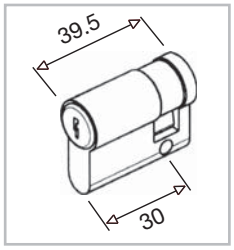

Locks - profile half cylinder type

	843001	1
	With 2 keys, V2432-E	
	832022	2
	Spare keys for 843001	
	843002	1
	With 1 square key, 8 mm	
	843003	1
	With 1 triangular key, 8 mm	
	843248	1
	With 2 keys A434	
	Spare keys are available on request.	

Vandal proof nameplate holder

843304	1

Can be placed on every flat surface, by drilling two holes Ø 5.5 mm; the identification window is used as a drill template.
Steady against vandalism; it keeps its total isolation ⧈.
Possibility to describe manually and/or to use the standard letteringsystems; the maximal letterheight is 18 mm.
Usefull dimensions of letters: 18 x 143
Outside dimensions: 30 x 183 x 5

Document pocket

811516	1
DIN A4 - W x H = 325 x 180 mm	
832000	1
DIN A5 - W x H = 155 x 225 mm	

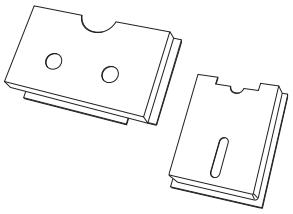

EH3/GD - Pedestals with greater depth

	Width	676	871	1200
Type EH3 / GD (H 875, D 424 mm) Factory-assembled IP43		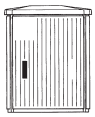		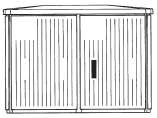
	Type	EH3/GD-AP - 031	EH3/GD-AP - 041	EH3/GD-AP - 051
	H x W x D	875 x 676 x 424	875 x 871 x 424	875 x 1200 x 424
	Ref. No.	843296	843360	843359
Type EH3 / GD (H 1125, D 676 mm) Factory-assembled IP43		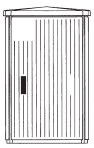	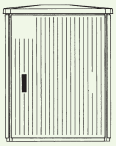	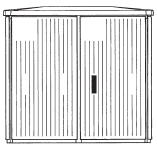
	Type	EH3/GD-AP - 233	EH3/GD-AP - 243	EH3/GD-AP - 253
	H x W x D	1125 x 676 x 676	1125 x 871 x 676	1125 x 1200 x 676
	Ref. No.	843358	843357	843356
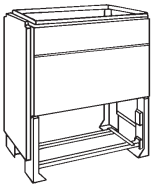 Polyester bases Kit-form For cabinets D = 424 mm	H x W x D	900 x 645 x 393	900 x 835 x 393	900 x 1164 x 393
	Ref. No.	843394	843397	843400
D = 676 mm	H x W x D	900 x 645 x 645	900 x 835 x 645	900 x 1164 x 645
	Ref. No.	843396	843399	843402
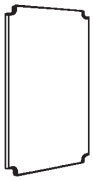 Mounting plate H = 875 mm	H x W x D	665 x 485 x 5	665 x 680 x 5	705 x 1000 x 5
	Ref. No.	843024	843044	843057
H = 1125 mm	H x W x D	915 x 485 x 5	915 x 680 x 5	915 x 1000 x 5
	Ref. No.	843070	843071	843072
Pertinax with fixing bolts				
Bottom plate D = 424 mm	H x W	635 x 380	830 x 380	1158 x 380
	Ref. No.	843413	843411	843409
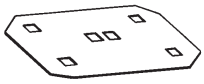 D = 676 mm	H x W	635 x 632	830 x 632	1158 x 632
	Ref. No.	843425	843410	843408
Polyester 3 mm with mounting bolts				

Accessories

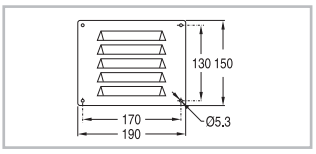

Louvre plate IP44

832019	1

Fits one ventilation opening.

Package includes 2 grids and 4 nylon nails.

Total insulation.

RAL 7035

Clamps for quick removal of bottom profile

843250	1

- Replace the standard fixation of bottom profile with fixed screws.
- Permits to remove the bottom profile without tools, after withdrawing the door.
- Better entry to the pedestal for cable connection.

Overview of the range ● Page E.2
Dimensional drawings ● Page I.37
Specifications for tender documents ● Page I.60
Power dissipation values ● Page I.83

Applications

- Power distribution
- Cable TV distribution
- Traffic signalling
- Camping sites
- Pump application

Standards

EN 60439-5
IEC 60439-5

Column cabinets

Common features

- Pedestal and base are made of hot moulded glass fibre reinforced polyester.
- Dyed in mass RAL 7035 light grey.
- Protection degree IP43/IP44 according to EN 60259, IEC 60259 and BS 5490
- Total insulation ⧈
- Impact strength IK10 against external impacts according EN/IEC 62262
- Corrosion resistant.
- UV stabilised for outdoor applications.
- Suitable for use in environments from –35°C to +125°C.
  Temporary exceeding temperatures will not be harmful.
- Fixing holes for threaded inserts M6 are provided in the rear panel allowing direct mounting of busbars, mounting plate or components.
  Inserts to fix a mounting plate are installed.
- The base can be buried into the ground for stable installation of the column.
- The rainhood shape prevents water stagnation on the roof.

Features for EH4

Cabinets with hinged door - IP43
- Pedestal and base are delivered together.
- Swing handle for half profile cylindrical lock.
- Door opening angle of 180°

Features for EH4-S

Cabinets with frontal lift-off segments - IP44
- Base and rear panel are moulded as one part.
- Recessed lock box for half profile cylindrical lock, protected by a vandal proof cover.
- The enclosure can be accessed by removing the frontal lift-off segments (not hinged).

Overview of the range ● Page E.2
Dimensional drawings ● Page I.39
Specifications for tender documents ● Page I.60
Power dissipation values ● Page I.82

EH4-00 EH4-0 EH4-1

EH4/EH4S - Column cabinets

	Width	395	495	745	320	320
			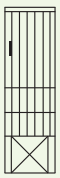			
	Type	EH4-00	EH4-0	EH4-1	EH4-S1	EH4-S2
	H x W x D	1600 x 395 x 224	1600 x 495 x 224	1600 x 745 x 224	1420 x 320 x 234	1850 x 320 x 234
	Ref. No.	844130	844131	844132	844153	844185
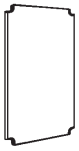 Mounting plate Pertinax with fixing bolts	Type					
	H x W x D	790 x 370 x 5	790 x 470 x 5	790 x 720 x 5	600 x 278 x 5	950 x 278 x 5
	Ref. No.	844133	844134	844135	844154	844186

Accessories

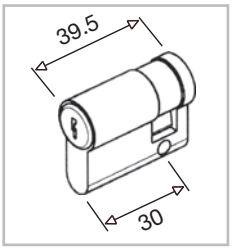

Locks - profile half cylinder type

832030	1
For EH4 - security lock V2432E	
832741	2
Spare keys for 832030	
832331	1
For EH4 - security lock V2432E for double locking	
843001	1
For EH4-S - with 2 keys, V2432-E	
832022	2
Spare keys for 843001	

Swing handle

844152	1
For EH4 DIN00/0/1- dual cylinder handle	

Filling pellets

422902	1

Pellets made out of clay as humidity barrier between ground and enclosure.
Recommended filling height 200-300 mm.
DIN 00-1: 1 bag
DIN 2-3: 2 bags

Pedestals IP44/54

Features

- Cabinets are made of hot moulded, glass fibre reinforced polyester.
- Dyed in mass RAL 7035 light grey.
- Three sizes in three widths; all sizes feature the same height and depth.
- Each size is available in two protection degrees; IP44 and IP54 according to EN 60529, IEC 60529 and BS 5490
- Delivered in space saving kit-form or factory assembled.
- Total insulation ⧈
- Protection degree IK10 against external impacts according to EN/IEC 62262
- Corrosion resistant.
- UV stabilized for outdoor applications.
- Suitable for use in environments from -35°C to + 125°C. Temporary exceeding temperatures will not be harmful.
- Three point locking mechanism, operated by an integrated handle or swing handle.
- The open doors can be manually unhinged to allow free access for maintenance.
- The door opening angle exceeds 180°
- The rear panel has mounting holes for self tapping screws HiLo 7.2 x 26 mm and threaded inserts M8, allowing direct mounting of busbars, a frame, a mounting plate for components.
- Supplied with open bottom.
- To be mounted on a plinth according to DIN 43629 standard dimensions between the fixation points.
- The rainhood shape prevents water stagnation on the roof.
- Cabinets can be coupled side to side or double deep.

Applications

- Power distribution
- Cable TV
- Camping sites
- Traffic signalling

Standards

EN 60439-5
IEC 60439-5

Accessories

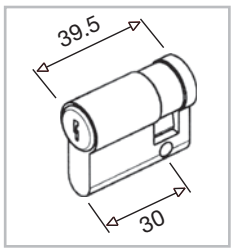

Locks - profile half cylinder type

843001	1
With 2 keys, V2432-E	
832022	2
Spare keys for 843001	
843002	1
With 1 square key, 8 mm	
843003	1
With 1 triangular key, 8 mm	
843248	1
With 2 keys A434	

Spare keys are available on request.

Vandal proof nameplate holder

843304	1

Can be placed on every flat surface, by drilling two holes Ø 5.5 mm; the identification window is used as a drill template.
Steady against vandalism; it keeps its total isolation ⧈.
Possibility to write on manually and/or to use the standard letteringsystems; the maximal letterheight is 18 mm.
Usefull dimensions of letters: 18 x 143
Outside dimensions: 30 x 183 x 5

Filling pellets

422902	1

Pellets made out of clay as humidity barrier between ground and enclosure.
Recommended filling height 200-300 mm.
DIN 00-1: 1 bag
DIN 2-3: 2 bags

Inserts

890845	100
Threaded inserts M8 (Type Dodge for rear panels)	
851372	50
Threaded inserts M5 (Type Dodge for side panels)	
844039	1
Special tool for securing threaded inserts M8	
890851	100
Hi-Lo screws 7.2 x 26 mm to fix the busbar system	

Overview of the range ● Page E.2
Dimensional drawings ● Page I.41
Specifications for tender documents ● Page I.61
Power dissipation values ● Page I.83

EH6 - Pedestals IP44/54

	Width	DIN 00	DIN 0	DIN 1
Type EH6 IP44		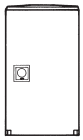	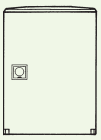	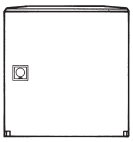
	Type	EH6 - 00	EH6 - 0	EH6 - 1
	H x W x D	830 x 470 x 320	830 x 605 x 320	830 x 800 x 320
Factory-assembled, recessed lock IP44	Ref. No.	844000	844049	844070
Kit form, recessed lock IP44	Ref. No.	844003	844053	844074
Type EH6 IP54		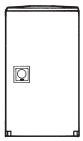	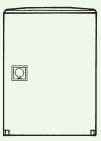	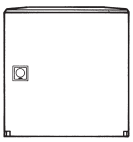
	Type	EH6 - 00	EH6 - 0	EH6 - 1
	H x W x D	830 x 470 x 320	830 x 605 x 320	830 x 800 x 320
Factory-assembled, recessed lock IP54	Ref. No.	844001	844050	844071
Kit form, recessed lock IP54	Ref. No.	844114	844057	844081
Kit-form, swing handle IP54	Ref. No.	844020	844068	844095
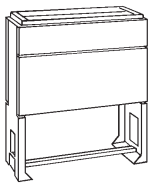 Polyester bases Kit-form	H x W x D	900 x 450 x 310	900 x 585 x 310	900 x 780 x 310
	Ref. No.	842098	842099	842100
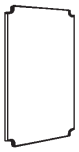 Mounting plate Pertinax with fixing bolts	H x W x D	703 x 360 x 5	703 x 495 x 5	703 x 690 x 5
	Ref. No.	844016	844065	844093
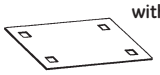 Bottom plate Polyester 3 mm with mounting bolts	H x W	427 x 285	562 x 285	757 x 285
	Ref. No.	843299	843300	843301
Wall fixing unit Two aluminium C-profiles with wall fixing lugs	W	540	675	870
	Ref. No.	843440	843441	843442

Accessories

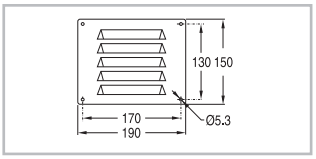

Louvre plate IP44

832019	1

Fits one ventilation opening.

Package includes 2 grids and 4 nylon nails.

Total insulation.

RAL 7035

Document pocket

811516	1

DIN A4 - W x H = 325 x 180 mm

832000	1

DIN A5 - W x H = 155 x 225 mm

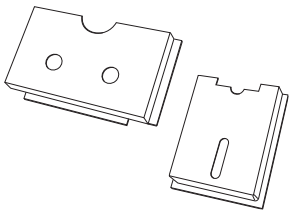

Stainless steel pedestals

Applications

- Energy distribution
- Recreation grounds
- Cable television
- Traffic regulation & signalling
- Telecommunications
- Market connections
- Event connections
- Gas distribution

A wide range of stainless steel cabinets RVS for outdoor use completes the delivery program of outdoor enclosures.
Together with the EH series of fibreglass-reinforced polyester cabinets and the full range of UTS cabinets for subterranean solutions, it provides an extremely versatile product offering.
RVS cabinets for outdoor use make it possible to offer professional above-ground solutions for cable networks, telecommunications, recreation grounds and other applications. The cabinets have partially sunken bases.

Standards

IEC 60439-5
IEC 60529
EN 60439-5
EN 60529
EN 50102

Advantages

- Flexibility in dimensions, colour and design.
- Easy and cheap to recycle.
- Guaranteed 30-year service life.
- Maintenance-free.
- Good mechanical properties (IEC 60947).
- High torsion resistance.
- Resists impact test with sharp point according to EN 60439-5.
- High IK value.
- Twists and bends (no tears or holes) on impact.
- High fire resistance.
- High vandal resistance.
- Special designs rapidly available, even as single orders.

Features

- The cabinets can be placed on either concrete or stainless steel bases.
- They can also be adapted for wall mounting.
- The protection degree IP43-IK 10 according to IEC 60529 and EN/IEC 62262.
- A high mechanical impact resistance according to IEC 60439-5 ensures that the cabinet is extremely vandal proof.
- Condensation is limited by the natural ventilation provided by labyrinth openings.

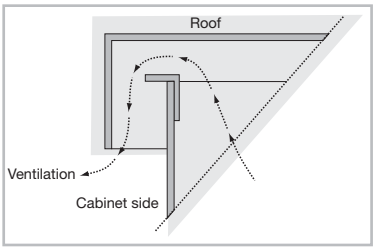

Overview of the range ● Page E.3
Dimensional drawings ● Page I.42
Specifications for tender documents ● Page I.62
Power dissipation values ● Page I.84

Construction

- Cabinets are made of 2 mm AISI 304 stainless steel with polyester surface treatment in RAL 7034.
- Anti-graffiti treatment available on request.
- Other RAL colours available on request.
- Doors are fitted with stainless steel hinged rods (8 mm) and the opened door is easy removable without tools.
- Doors hinge pins turn in nylon bushings, no corrosion at critical points of rotation is possible
- Natural ventilation with protection degree IP43.
- Large opening between doors and cabinet frame, no moisture accumulation is possible.
- Automatic condensation evacuation thanks to unique design of cabinet base.
- Natural ventilation thanks to labyrinth openings on top of the side panels and special base design.
- No internal moisture problems thanks to polystyrene plate inside the roof panel; any moisture formed is automatically discharged along vertical sides of cabinet.
- A 3 point rod closing mechanism sliding in synthetic bearings for high cabinets and double door cabinets. A single locking point mechanism for smaller doors.
- Standard handle suitable for profile half-cylinder lock. Other lock types are available on request.
- Cabinet suitable for fixing, with four M12 bolts, to concrete or stainless steel basements according to DIN 43629. The stainless steel fixing bolts are adjustable.
- Wall mounting brackets and a stainless steel bottom plate in the RAL 7034 are available in case of wall mounting.
- Four or six fixing holes in rear panel for mounting a mounting plate or frame.
- Cables easily inserted thanks to removable bottom profile. (sill profile).
- Guaranteed earthing independent of corrosion-sensitive transitional surfaces.

Door stop

Handle

Cable entry door

Cable entry door (inside)

Wall mounting

Customisation on request

Stainless steel pedestals IP43-IK10

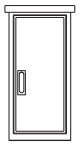

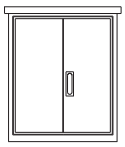

Standard delivery
- a plain door
- central locking system
- handle without lockinsert
- open bottom
- without mounting plate

		Pedestals with single door			Pedestals with double door		
		DIN 00	DIN 0	DIN 1	DIN 2	DIN 3	DIN 4
Pedestal	Type	RVL 300	RVL 30	RVL 31	RVL 32		
Height 650	H x W x D	650 x 460 x 355	650 x 595 x 355	650 x 790 x 355	650 x 1120 x 355		
	Ref. No.	422841	422842	422843	422844		
Mounting plate	Type	MPL 300	MPL 30	MPL 31	MPL 32		
	Ref. No.	422845	422846	422847	422848		
Pedestal	Type	RVN 300	RVN 30	RVN 31	RVN 32	RVN 33	RVN 34
Height 900	H x W x D	900 x 460 x 355	900 x 595 x 355	900 x 790 x 355	900 x 1120 x 355	900 x 1450 x 355	900 x 1780 x 355
	Ref. No.	422851	422852	422853	422854	422855	422856
Mounting plate	Type	MPN 300	MPN 30	MPN 31	MPN 32	MPN 33	MPN 34
	Ref. No.	422857	422858	422859	422860	422861	422862
Pedestal	Type		RVD 30	RVD 31	RVD 32	RVD 33	RVD 34
Height 1000	H x W x D		1000 x 595 x 355	1000 x 790 x 355	1000 x 1120 x 355	1000 x 1450 x 355	1000 x 1780 x 355
	Ref. No.		422863	422864	422865	422866	422867
Mounting plate	Type		MPD 30	MPD 31	MPD 32	MPD 33	MPD 34
	Ref. No.		422868	422869	422870	422871	422872
Pedestal	Type			RVH 31	RVH 32	RVH 33	RVH 34
Height 1150	H x W x D			1150 x 790 x 355	1150 x 1120 x 355	1150 x 1450 x 355	1150 x 1780 x 355
	Ref. No.			422873	422874	422875	422876
Mounting plate	Type			MPH 31	MPH 32	MPH 33	MPH 34
	Ref. No.			422877	422878	422879	422880
Pedestal	Type					RVS 33	RVS 34
Height 1350	H x W x D					1350 x 1450 x 355	1350 x 1780 x 355
	Ref. No.					422881	422882
Mounting plate	Type					MPS 33	MPS 34
	Ref. No.					422883	422884

Pedestals with double door and 2 compartments

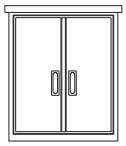

Standard delivery
- a plain double door
- central locking system / door
- handle without lockinsert / door
- with one mounting plate in melamine over the total width of the pedestal
- with separation sheet in melamine - IP20
- open bottom

	DIN 2			Double door usefull width		Mounting plate outer dimensions		Mounting plate usefull width compartment		
	H x W x D	Ref. No.	Type	X1 Left	X2 Right	Height	Z Width	Y1 Left	Y2 Right	Fig.
Height 650	650 x 1120 x 355	422906	RVL 32 S 1 ZZ	480	480	530	1020	500	500	1
Height 900	900 x 1120 x 355	422907	RVN 32 S 1 ZZ	480	480	780	1020	500	500	1
		422908	RVN 32 S 2 ZZ	315	645	780	1020	335	665	2
		422909	RVN 32 S 3 ZZ	645	315	780	1020	665	335	3
Height 1150	1150 x 1120 x 355	422913	RVH 32 S 1 ZZ	480	480	1030	1020	500	500	1
		422914	RVH 32 S 2 ZZ	315	645	1030	1020	335	665	2
		422915	RVH 32 S 3 ZZ	645	315	1030	1020	665	335	3
	Base									
In stainless steel		422895	RF 22							
	DIN 3									
Height 900	900 x 1450 x 355	422910	RVN 33 S 1 ZZ	645	645	780	1350	665	665	1
		422911	RVN 33 S 2 ZZ	480	810	780	1350	500	830	2
		422912	RVN 33 S 3 ZZ	810	480	780	1350	830	500	3
Height 1150	1150 x 1450 x 355	422916	RVH 33 S 1 ZZ	645	645	1030	1350	665	665	1
		422917	RVH 33 S 2 ZZ	480	810	1030	1350	500	830	2
		422918	RVH 33 S 3 ZZ	810	480	1030	1350	830	500	3
	Base									
In stainless steel		422896	RF 23							

Mounting plate in melamine
Usefull dimensions:
enclosures height minus 120 mm
enclosures width minus 100 mm
thickness 19 mm

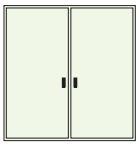
Fig. 1

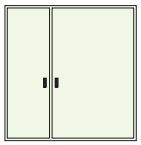
Fig. 2

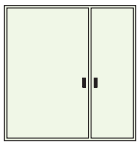
Fig. 3

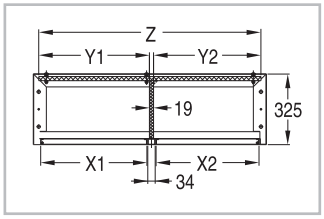

Cross section

Accessories

Fixation kit for mounting plate

	422849	1
For DIN 00, DIN 0 and DIN 1		
	422850	1
For DIN 2, DIN 3 and DIN 4		

With special bolts and nuts

Paint touch-up kit

	422901	1
RAL 7034		

Bases in stainless steel

For DIN 00	422892	1
For DIN 0	422893	1
For DIN 1	422894	1
For DIN 2	422895	1
For DIN 3	422896	1
For DIN 4	422897	1

Optional: kti for mounting fuse strips.

Document pocket

	811516	1
DIN A4 - W x H = 325 x 180 mm		
	832000	1
DIN A5 - W x H = 155 x 225 mm		

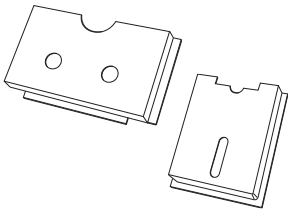

Door stop

	422898	1

Filling pellets

	422902	1

Pellets made out of clay as humidity barrier between ground and enclosure.

Recommended filling height 200-300 mm.

e-Catalogue / Application guide Intro
Insulated boxes A
Insulated wall mounting cabinets B
Wall mounting system enclosures C
Sheet steel distribution boards D
Pedestals E
F.2 **UC-Cabinet** - Underground cabinets
Subterranean enclosures F
Climate control G
General accessories H
General characteristics I
Index X

Underground cabinets

Applications

- Temporary connection at markets, fairs and events
- Low voltage distribution
- Glass fibre connections
- IT applications
- Mobile telephone networks
- Sewer installations
- kWh meter enclosures
- Telephone network Repeater Access Modules

Outdoor locations
- Market places
- City squares
- Harbours
- Railway stations
- Sports stadia and arenas
- Airports
- Shopping centres

Indoor locations
- Factories
- Storage facilities
- Maintenance areas
- Sports halls
- Event halls
- Congress halls
- Shopping malls

Aesthetical solution

- No obstacle at street level
- Fully integrated solutions
- The cover can integrate paving materials
- Extra public space

Safety

- Cover closed during use
- Due to Diving bell system (Boyle's law) the enclosure can be used without any problem immediately after a flood (tested by 1m water during 48 h)
- The user does not have to access electrical equipment
- User compartment is separated from electricity supplier compartment
- Outgoing cables channelled through a cable chamber
- Cover load tested by COPRA according to EN 124B125 (12.5 Ton)
- Electrically tested by Kema according to EN 60439-1 and IEC 60529
- Complied to RoHs-guidelines (directives 200/95/EC)
- Concrete enforced with polyester fibers. Cover in stainless steel AISI 304

No damage due to flood
Due to the diving bell system (Boyle's law) the cabinet can be used without any problem immediately after a flood (tested by 1 m water during 48 h, and proven reliable).

Standards

EN 60439-1	NEN EN 124
IEC 60529	EN 124B125

Dimensional drawings ● Page I.44
Specifications for tender documents ● Page I.63

Type Stadion (Stadium)

Characteristics

Common compartment for users and supplier.

Technical features

Maximum voltage	400/230VCA
Maximum incoming rating	63A
Maximum outgoing rating	32A
Frequency	50Hz
Maximum outgoing functions	8
Operating temperature	-20°C to +40°C
Level of immersion	1 m above groundlevel
Cover load	12.5 tons
Maximum angle of cover opening	80°
Lifetime	20 years
Dimensions (H x W x L)	519 x 620 x 770 mm

Basic compositions

	32A/5P	16A/5P	16A/3P	Main breaker	kWh	Ref. No.
Stadion 1	1	-	6	1	-	**424415**
Stadion 2	-	1	6	1	-	**424416**
Stadion 3	2	-	5	1	-	**424417**
Stadion 4	-	2	5	1	-	**424418**
Stadion 5	1	1	5	1	-	**424419**
Stadion 6	3	-	2	1	-	**424420**
Stadion 7	1	2	2	1	-	**424421**
Stadion 8	2	1	2	1	-	**424422**

Type Fair

Characteristics

Separated compartments for users and supplier.

Technical features

Maximum voltage	400/230VCA
Maximum incoming rating	63A
Maximum outgoing rating	32A
Frequency	50Hz
Maximum outgoing functions	8
Operating temperature	-20°C to +40°C
Level of immersion	1 m above groundlevel
Cover load	12.5 tons
Maximum angle of cover opening	80°
Lifetime	20 years
Dimensions (H x W x L)	519 *(569)* x 708 x 1230 mm

Basic compositions

	32A/5P	16A/5P	16A/3P	Main breaker	kWh	Ref. No.
Fair 1	2	-	5	1	-	**424423**
Fair 2	-	2	5	1	-	**424424**
Fair 3	1	1	5	1	-	**424425**
Fair 4	3	-	2	1	-	**424426**
Fair 5	2	1	2	1	-	**424427**
Fair 6	1	-	7	1	-	**424428**
Fair 7	-	1	7	1	-	**424429**
Fair 8	-	-	8	1	-	**424430**

Type Market

Characteristics

Separated compartments for users and supplier.

Technical features

Maximum voltage	400/230VCA
Maximum incoming rating	63A
Maximum outgoing rating	32A
Frequency	50Hz
Maximum outgoing functions	12
Operating temperature	-20°C to +40°C
Level of immersion	1 m above groundlevel
Cover load	12.5 tons
Maximum angle of cover opening	80°
Lifetime	20 years
Dimensions (H x W x L)	519 *(569)* x 1014 x 1195 mm

Basic compositions

	32A/5P	16A/5P	16A/3P	Main breaker	kWh	Ref. No.
Market 1	3	-	7	1	-	**424431**
Market 2	2	-	10	1	-	**424432**
Market 3	1	-	11	1	-	**424433**
Market 4	2	1	7	1	-	**424434**
Market 5	1	2	7	1	-	**424435**
Market 6	-	1	11	1	-	**424436**
Market 7	1	1	10	1	-	**424437**
Market 8	-	2	10	1	-	**424438**

Enclosure for telecommunications applications

Applications

UTS enclosure for RAM installations. Repeater Access Module
This enclosure has been designed specifically for housing sensitive electrical equipment such as is used for telecommunication links.
The equipment is protected by a built-in enclosure (IP65) which, in turn, is integrated into a sealed compartment.

Characteristics

- Dimensions: L x W x D = 1165 x 895 x 515 mm.
- The cover features a brass surface-mounted lock that accepts reduced-depth profile half cylinder lock
- Normal level of groundwater table should not extend above 25 cm below surface (street) level.
- Maximum permissible load 25 tonnes according to EN 124 standard
- Under certain conditions the cover can be provided with a paving material or similar finish so that it blends into its surroundings.

e-Catalogue / Application guide Intro
Insulated boxes A
Insulated wall mounting cabinets B
Wall mounting system enclosures C
Sheet steel distribution boards D
Pedestals E
Subterranean enclosures F
Climate control G
General accessories H
General characteristics I
Index X

G.2 **Heating**
G.7 **Ventilation**

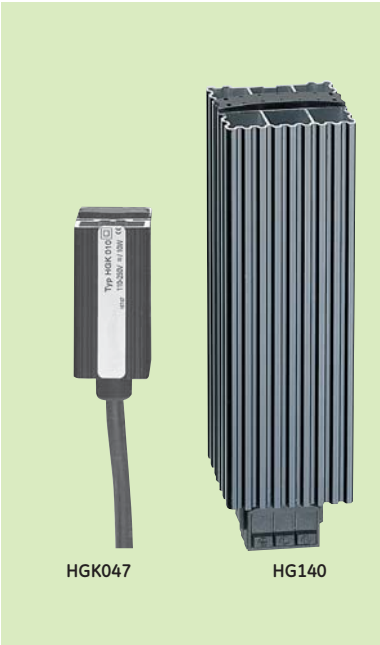

Heating units

Function

Small heating units for enclosures are important accessories for guaranteeing operational safety of control and distribution units.
They are mainly used to prevent formation of condensation or to maintain a minimum temperature inside the enclosure, that is, a few degrees above the temperature of the surrounding air.

Advantages

- Energy saving
- Dynamic heating-up
- Self-regulating
- Temperature-limiting
- Quick snap-on fixing
- No maintenance
- Long endurance
- Compact housing

Operating principle

Small heating units are fitted with PTC heating resistances (positive temperature coefficient semi-conductors). The self-regulating and self-limiting semi-conductor heating elements maintain a constant temperature on the heating surface of the small heating units. The aluminium casing transmits heat to the surrounding air by natural radiation. Special extruded sections ensure the heat is fully radiated.

Standards

VDE 0700
IEC 60 335-1
UL on request

Heating requirements calculation

Using the formula: **P = A x ΔT x k**
P = power supplied by the resistance (W)
A = external free surface of the enclosure (m^2)
Δ T =difference in temperature between the internal temperature after heating, and the external temperature, in °K.
k = thermal radiation coefficient: sheet steel: 5.5 W/m^2K
polyester: 3.5 W/m^2K

Approximation rule: recommended value 100 w/m^3 of enclosure volume.
For an outdoor installation, the calorific power should be doubled.
Several small heating units are better than a single large heating unit.

Applications

Switch cabinets, instrument cases, display panels, control desks, automatic bank machines, car park control systems, etc.

Fitting

Push-fit onto DIN 35 mm rail (EN 50 022).
Installation preferably at the bottom of the cabinet, at about 40 mm from the equipment itself.

HGK047 HG140

Heating units HGK047-HG140

Technical data

Nominal voltage	140-250 V AC/DC (max. 265 V)
Power	10 to 150 W
Heating element	self-regulating PTC resistance
Heating body	anodised aluminium sections
Protection class	I
Protection level	HGK047: IP44 - HG140: IP20
Connection	Series HGK047: silicon cable 2 x 0.75 m^2 length 300 mm Series HG140: with terminals 0.5 - 2.5 mm^2
Dimensions (H x D)	Series HGK047: 25 x 60 mm Series HG140: 70 x 60 mm

Order codes

	W(1)	I max. (A)	H (mm)	Wt. (kg)	Ref. No.	Pack.
HGK047	10	0.8	50	0.10	**818105**	1
	20	1.0	60	0.11	**818106**	1
	30	1.5	70	0.12	**818107**	1
HG140	15	0.5	65	0.3	**818092**	1
	30	1.0	65	0.3	**818093**	1
	45	1.0	65	0.3	**818094**	1
	60	1.5	140	0.5	**818097**	1
	75	1.8	140	0.5	**818098**	1
	100	2.4	140	0.5	**818099**	1
	150	4.5	220	0.8	**818102**	1

(1) At ambient temperature 20°C

With forced ventilation with an axial fan.
Prevents formation of dangerous levels of condensation, and maintains a constant temperature inside the enclosure.

Heating unit HGL046 with fan

Technical data

Nominal voltage	220/280V 50-60Hz
Power	250 and 400W
Heating element	traditional heating element with built-in thermostat
Heating body	anodised aluminium sections
Surface temperature	±75°C
Protection class	I
Protection level	IP20
Connection	three-pole terminal strip 2.5 mm^2
Fitting	on DIN 35 mm rail
Fan	rate: 35 m^3/h without counter-pressure ball bearing service: 30000 hrs at 20°C

Order codes

	W	B x D	H (mm)	Wt. (kg)	Ref. No.	Pack.
HGL046	250	80 x 80	178	0.95	**818103**	1
	400	80 x 80	252	1.30	**818104**	1

HV031: Heating element, extra compact, flatter, only 22mm thick.

HVL031: HV031 heating element with an axial fan to give optimal heat radiation. Fresh air drawn in from outside is heated and dried.
If the fan fails, thermal power drops automatically to prevent overheating.

Applications

Telecommunications systems, control panels, display panels, control desks, bank cash machines, car park control systems.

Heating units HV031 and HVL031 (with fan)

Technical data

Nominal voltage	220/230V 50-60Hz
Power	100 - 150 - 200 - 300 - 400W
Heating element	traditional heating element with built-in
Heating body	thermostat
Connection	anodised aluminium sections
Surface temperature with	five-pole terminal strip 2.5 mm^2
fan	45°C at a distance of 50 mm
Fitting	on DIN rail
Protection class	I / IP20
Fan rate (without	35 m^3/h (100 - 150W)
counter-pressure)	108 m^3/h (200 - 300 - 400W)
Dimensions	80 x 112 x 22 mm (100 - 150W)
(H x W x D)	119 x 151 x 22 mm (200 - 300 - 400W)
Weight	240 g (100 - 150W)
	490 g (200 - 300 - 400W)

Order codes

	Power	Ref. No.	Pack.
HV031	100W	**818177**	1
	150W	**818178**	1
	200W	**818091**	1
	300W	**818162**	1
	400W	**818163**	1
HVL031 with fan	100W	**818179**	1
	150W	**818180**	1
	200W	**811542**	1
	300W	**818164**	1
	400W	**818165**	1

- Compact heater with integrated ventilation CR 027 350/550W 230V.
- Heating capacity adjusts to ambient temperature.
- Safely cut-out in case of fan failure.
- Adjustable temperature range.

Semi conductor fan heater

Technical data

Nominal voltage	220/230V 50-60Hz
Power	350 / 550W
Current at make	7.5 A - 350W / 230V
	8.5 A - 550W / 230V
Heating element	PTC resistor - self regulating
Temperature regulation	Adjustment range 0 - 60°C
Optical indicator	Thermostat control lamp
Casing	Plastic, light grey
Protection class	II (double insulated)
Protection level	IP 20
Connection	4 pole terminal connector, 2.5 mm^2
Fitting	on DIN 35 mm rail
Axial fan	45 m^3/h, ball bearing
	service life 50,000 h at 25°C
Dimensions	165 x 100 x 124 mm (HxWxD)
Weight	1.1 kg
Approval	UL file E 204590

Order codes

	Ref. No.	Pack.
CR 027	**818193**	1

Temperature regulators

Function

FZK 011, KTO, KTS and ZR 011 elements regulate and control the temperature inside the enclosure by means of small heating elements, fans, heat exchangers and refrigeration units.

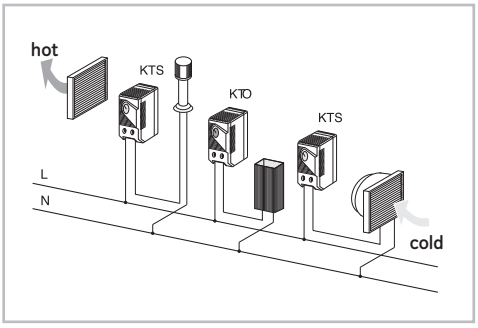

Technical data

Type	FZK 011	KTO	KTS	ZR 011
Range of adjustment:				
Temperature	10°C - 60°C	0°C - 60°C	0°C - 60°C	0°C - 60°C
Hysteresis	0.5K	7K	7K	7K
Contact type	Inverter: single pole	NC	NO	NO
Power(1)	NC 10A (4) 250V AC NO 5A (2) 250V AC resistive load	10A (2) 250V AC resistive load	10A (2) 250V AC resistive load	10A (2) 250V AC resistive load
Weight	100 g	36 g	36 g	90 g
Dimensions (H x W x D)	67 x 50 x 38	60 x 33 x 35	60 x 33 x 35	67 x 50 x 46
Application diagram	(see below)	red button: heating	blue button: cooling, fan, alarm signal	(see below)
Protection level	IP20	IP20	IP20	IP20
Connection	2.5 mm² screw connector			
Fitting	push fit on DIN 35mm rail (EN 50022)			
Case	plastic UL 94 VO			
EMC	according to EN 55014-1-2, EN 61000-3-2, EN 61000-3-3			

(1) Values in brackets = inductive load cos φ = 0,60

Application diagram

FZK 011

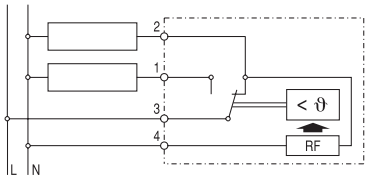

ZR 011

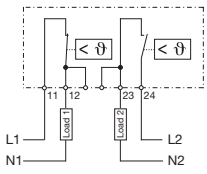

Load 1: heater
Load 2: Filter fan, cooling equipment, signal device

Order codes

	Ref. No.	Pack.
FZK 011	818079	1
KTO	818080	1
KTS	818081	1
ZR 011	818217	1

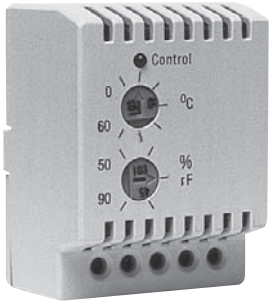

The electronic temperature regulator and humidity controller controls the temperature and humidity level of the air independently of each other by switching resistive and inductive loads (e.g. small heating units and refrigeration units).

ETF 012

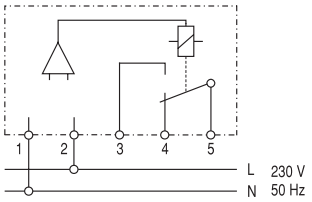

Humidity controller

Technical data

Range of adjustment:	
Temperature	0°C - 60°C
Hysteresis	2K
Humidity	50 %-90 %
Response time	160 sec.
Power supply voltage	230V/50-60Hz
Contact type	relay outputinverter contact
Power(1)	8A (4) 250V AC 0.5A 100V DC 8A 12V DC 5A 35V DC
On/off indicator	LED
Weight	140 g
Dimensions (H x W x D)	50 x 67 x 43
Protection level	IP20
Connection	2.5 mm^2 screw connector
Fitting	push fit on DIN 35mm rail (EN 50022)
Case	plastic UL 94 VO
Interference protection	N according to VDE 0875

Order codes

	Ref. No.	Pack.
ETF 012	818083	1

(1) Values in brackets = inductive load cos φ = 0,80

The electromechanical hygrostat is designed to controle enclosure heaters so that the dew point is raised when a critical relative humidity of 65% is exceeded.
In this way condensation and corrosion are effectively prevented.

MFR 012

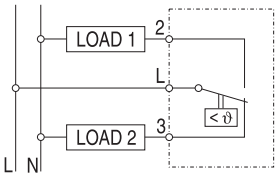

Mechanical hygrostat

Technical data

Adjustment range	35-95% relative humidity
Switching accuracy	± 3%
Voltage	250V AC
Switching capacity, max. load	
resistive load	5 A 250V
inductive load cos phi 0.8	0.2 A AC 250V
inductive load L/R = 3 ms	1 A DC 50V - DC 75V
switching capacity, min.load	100 mA DC/AC 20V
contact type	change over contact
Connection	terminals in casing 3 x 2.5 mm^2
Casing	Plastic, light grey
Mounting	on DIN 35 mm rail
Protection level	IP 20
Dimensions	67x50x38 mm (HxWxD)
Weight	60 g

Order codes

	Ref. No.	Pack.
MFR 012	818190	1

Enclosure ventilation

Pressure differences occur because of temperature variations between inside the enclosure with a high protection degree and the environment.
In case of vacuum, dust and humidity can be absorbed through the door seal and can enter the enclosure.
As the humidity cannot exit the enclosure condensation may occur.
In order to prevent this pressure compensation plugs or ventilation grids should be used.

Louvre plate IP44

Fits one ventilation opening
Package includes 2 grids and mounting accessories
Total insulation

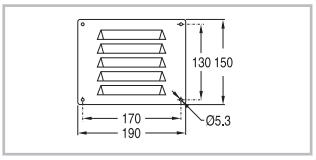

832019	1

Outlet 2000 mm²

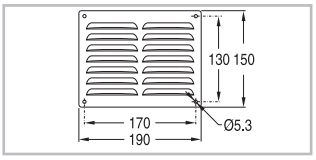

832743	1

Outlet 3000 mm²

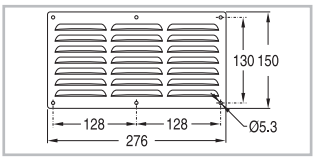

832744	1

Outlet 4500 mm²

Ventilation grids - IP44(1)

Set of 2 ventilation grids
Drilling Ø 34.9 mm
(1) If installed i.e. inside ARIA corners, underneath PolySafe roof

831009	1

Air vents IP44

Kits of two pieces in polyamide

RAL 7035	**833677**	1

Two air vents must be mounted per enclosure to ensure sufficient air circulation and prevent condensation water.
Complete with template and screws.
Air vents are preferably mounted in the upper and lower part of the base.

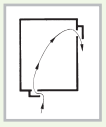

Air vent (IPx4)

To allow ventilation and prevent condensation. Air vents are preferably mounted in the upper and lower part of the box - M20

861728	25

Pressure compensation plug - IP55

Kit of two pieces

818078	1

In a tightly closed enclosure, pressure differentials can occur during extreme temperature variations, such as day/night operation. The risk of dust and humidity being absorbed increases dramatically.
The plug permits a controlled change in pressure.
Easy installation in each enclosure.

Technical data

Dimensions: dia 65.5 mm x 30.5 mm
Cut-out: dia 37 mm
Fixation with PG 29 thread or nut
Material: ABS / PC
Air inlet: ± 7 cm²
Protection: IP55

Remark: for optimal pressure compensation the use of 2 plugs, installed diagonally to each other, is recommended.

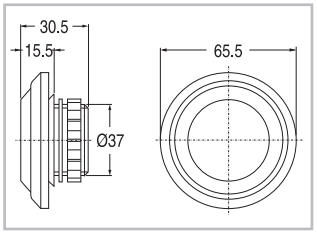

Pressure compensation plug - IP66

Set of 2 pieces

818223	1

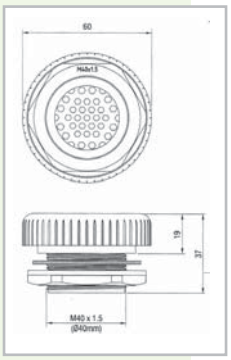

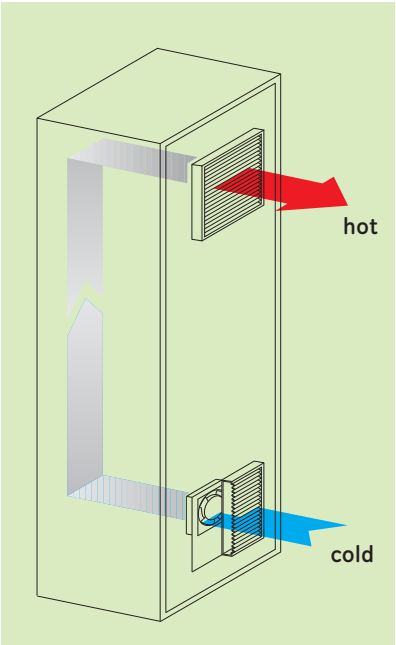

The electrical operating elements built into a control enclosure, such as power converters, transformers, inductance coils, contactors, relays, etc., emit dissipation heat into the surrounding air.

If this dissipation heat is not removed, it may cause the temperature inside the enclosure to exceed the temperature permissible for electrical equipment. This poses a hazard to, in particular, electronic components.

The heat must therefore be removed to avoid malfunction and, ultimately, idle time. Natural aeration (by domes, gills, etc.) is not recommended, as the risk of contamination is very high and, in addition, the degree of protection of the enclosure cannot be maintained.

In such cases, forced aeration with appropriate built-in filters is the answer. In this system, the cooler ambient air is sucked by a fan into the lower part of the control enclosure, simultaneously filtered, and then blown into the body of the enclosure.

Here the air absorbs the dissipated heat and is then removed via an exhaust filter located in the upper part of the enclosure. An overpressure created simultaneously in the enclosure prevents dust particles penetrating any openings in the housing. Removing warm air by suction is not recommended, as the partial vacuum created within the enclosure would neutralise the dust-protective effect.

Enclosure ventilation

- Colour RAL 7035
- Gasket included
- IP54 as standard
- On request:
  filter fans and exhaust filters
  type LS...K and type LG...K
  in colour RAL 7032

Filter fan selection

The air flow (volume flow rate) of the filter fan depends on the total thermal loss and the temperature difference Δ t between the permissible interior temperature and the ambient temperature.
The following formula applies here:

$$V\ (m^3/h) = \frac{3.1\ P\ (W)}{\Delta\ T\ (K)} \times 1.15$$

V = required air flow (m^3/h) - P = thermal loss in watts (W)
Δ T = interior/ambient temperature difference in Kelvin (K)

3.1 = constant numerical value of miscellaneous ventilation data
1.15 = 15% margin

Air flows (m^3/h) for thermal losses up to 3000 watts and temperature differences (DT) of 5...25 (K) can be taken from the selection chart.
It is recommended that a 15% margin be added to allow for contaminated filter mats or extreme conditions.

The air flows specified for the individual filter fans were measured in accordance with DIN 24163. At an air density of 1.2 kg/m^3, the tolerance is ±5%.

Filter material

DIN-tested VILEDON P15/350S, P15/500S or T3/290S filter mats (to DIN 24185) are used in the filter fans and exhaust filters. The material is thermally bonded. Behaviour in fire corresponds to DIN 53438, class F1.

The P15/350S filter mat collects dust particles of a minimum size of 10 µm at a separation efficiency of 85%, while the P15/500S filter mat collects dust particles of a minimum size of 5 µm at a separation efficiency of 94%.

If the dust particles are extremely fine, the supplementary, denser T3/290S filter mat may be used. This collects dust particles of a minimum size of 0.5 µm at a separation efficiency of 96% (please note the reduced air flow).

Soiled filter mats can be cleaned by rinsing out with water, by beating, or by blowing through with compressed air (do not wring out!).

Housing

Housings are made of heat-resistant ABS plastic (-35°C to +85°C), self-extinguishing to UL 94 VO, tracking resistance to 3kA. Colour RAL 7035.
Other colours available upon request.

Degree of protection

Our filter fans are conform to relevant CE regulations.
Contact-voltage proof to DIN 31001. Resistance to foreign bodies and water to IP54 (EN 60529) is achieved by combining a horizontal air flow with a gasket, delivered as a standard.

Advantages

Serie LV filter fans offer the follow advantages:
- Quick mounting ⇨ Snaps into the cut-out, no screws needed
- Low shape ⇨ Maximum protrusion of the cover is only 6.5 mm

Selection of the filter fan and the exhaust filter

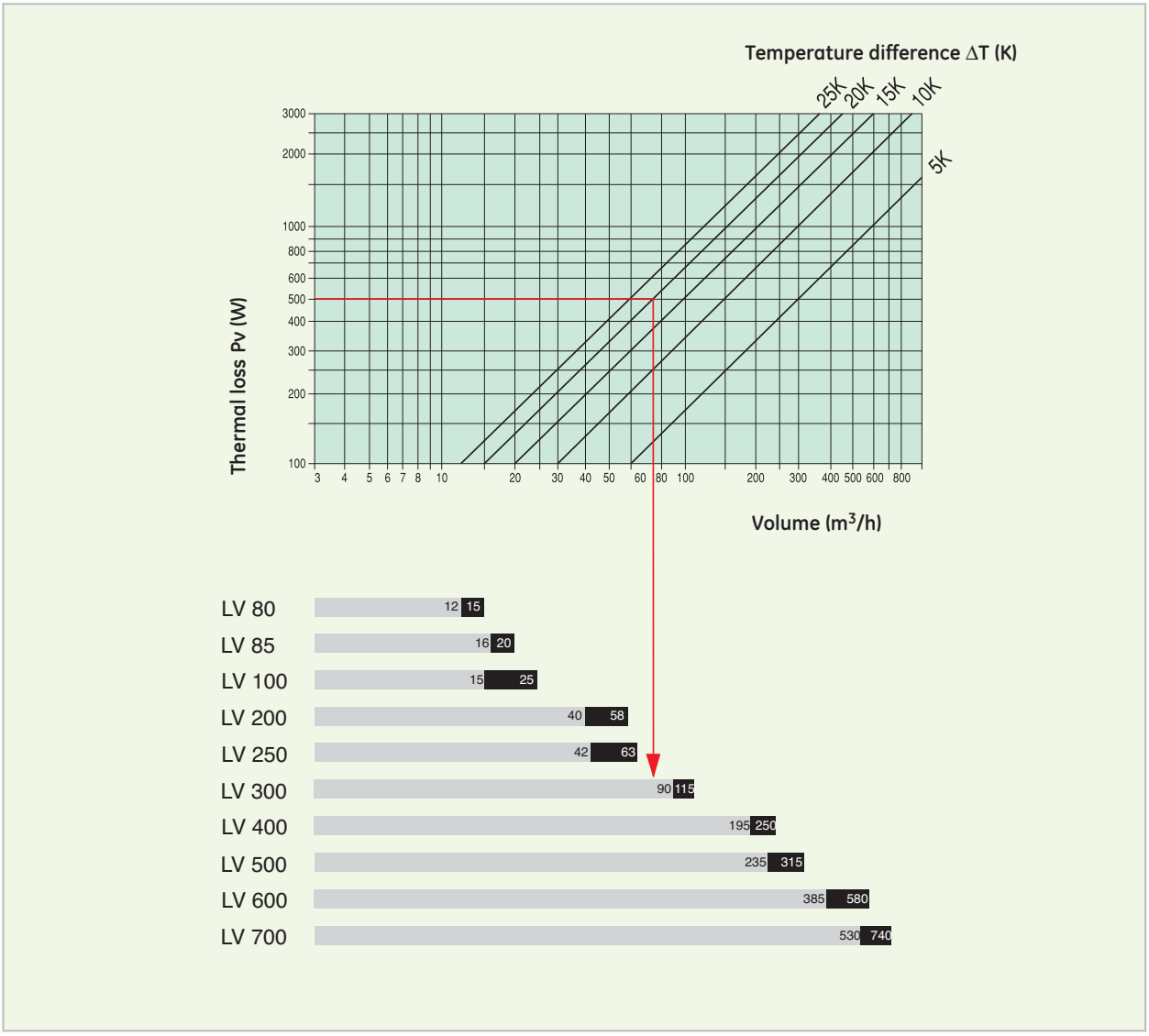

Example

Parameters

Thermal loss	500W
Temperature difference	20K

Selection

LV 300 + GV 300 →

90	Filter fan + exhaust filter
115	Filter fan free blowing with filter mat P15/500S

Filter fans and exhaust filters

Standard delivery

Filter fan				Exhaust filter		
230VAC - 50/60Hz IP54 sealing included standard filter mat P15/350 S RAL 7035				IP54 sealing included standard filter mat P15/350 S RAL 7035		
Type	**Ref. No.**	**m³/h**	**Cutout in mm(3)**	**Type**	**Ref. No.**	**m³/h**
LV 80(2)	**818195**	15	68 x 68	**GV 80**	**818200**	12
LV 85(1)(2)	**818196**	20	68 x 68	**GV 80**	**818200**	16
LV 100(2)	**818197**	25	92 x 92	**GV 100**	**818201**	15
LV 200	**818140**	58	116 x 116	**GV 200**	**818144**	40
LV 250	**818198**	63	125 x 125	**GV 250**	**818202**	42
LV 300	**818141**	115	177 x 177	**GV 300**	**818145**	90
LV 400	**818142**	250	223 x 223	**GV 400/500**	**818146**	195
LV 500	**818143**	315	223 x 223	**GV 400/500**	**818146**	235
LV 600	**818199**	580	292 x 292	**GV 600/700**	**818182**	385
LV 700	**818181**	740	292 x 292	**GV 600/700**	**818182**	530

(1) 24VDC (2) P15/150S (3) Detail drawing see page I.45

Technical data filter fan

Filter fan 230VAC 50/60Hz		**818195**	**818196**	**818197**
Filter fan type		**LV 80**	**LV 85**	**LV 100**
Exhaust filter		GV 80	GV 80	GV 100
IP54 & sealing is standard		yes	yes	yes
Free air flow	m³/h	15	20	25
In combination with exhaust filter	m³/h	12	16	15
Standard filter mat P 15/150 S (67 % efficiency)		yes	yes	yes
Standard filter mat P 15/350 S (85 % efficiency)		-	-	-
Optional filter mat P 15/500 S (94 % efficiency)				
Free air flow	m³/h	-	-	-
In combination with exhaust filter	m³/h	-	-	-
Optional filter mat P 15/350 S + fine filter mat T3/290 S (96 % efficiency)				
Free air flow	m³/h	-	-	-
In combination with exhaust filter	m³/h	-	-	-
Power input 230VAC - 50/60Hz	W	5/4	3 (24VDC)	12
Current 230VAC - 50/60Hz	A	22/16mA	130mA	70mA
Noise level	dB (A)	27	48.5	30
Service life	hour	40000	60000	37500
Speed	rpm	2550/3100	6850	2700/3200
Temperature	-10°C to +55°C	-20°C ... +65°C	-20°C ... +65°C	yes
Approval	CE/UL/CSA	yes	yes	yes
Turn motor 180° to change from blowing to sucking (reduced air flow)		yes	yes	yes
Suction version can be ordered as option		-	-	-
115VAC	on request	-	-	yes
400VAC	on request	-	-	-
24VDC	on request	yes	standard	yes
12VDC	on request	yes	yes	yes
Options				
Spare filter mat P15/350 S		-	-	yes
Spare filter mat P15/500S		-	-	-
Fine filter mat T3/290S		-	-	-
Gasket IP 54		-	-	-

Dimensional drawings ● Page I.45

Gasket (spare part)		Filter mat (spare part)							
IP54 Polyethyleen		P15/150S degree of separation 67% filter class(4) G2 (EU 2)		P15/350S degree of separation 85% filter class(4) G3 (EU 3)		P15/500S degree of separation 94% filter class(4) G4 (EU 4)		T3/290 S degree of separation 96% filter class(4) G4 (EU 4)	
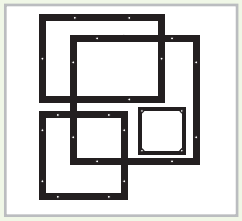									
Type	**Ref. No.**	**Type**	**Ref. No.**	**Type**	**Ref. No.**	**Type**	**Ref. No.**	**Type**	**Ref. No.**
D 80	**818203**	AM 815 P	**818206**		-		-		-
D 80	**818203**	AM 815 P	**818206**		-		-		-
D 100	**818204**	AM 115 P	**818207**		-		-		-
D 200	**818173**		-	AM 235 P	**818208**	AM 200 P	**818166**		-
D 250	**818205**		-	AM 0135 P	**818209**	AM 01 P	**818213**		-
D 300	**818174**		-	AM 335 P	**818210**	AM 300 P	**818167**	AM 300 T	**818170**
D 400	**818175**		-	AM 435 P	**818211**	AM 400 P	**818168**	AM 400 T	**818171**
D 400	**818175**		-	AM 435 P	**818211**	AM 400 P	**818168**	AM 400 T	**818171**
D 700	**818176**		-	AM 735 P	**818212**	AM 700 P	**818169**	AM 700 T	**818172**
D 700	**818176**		-	AM 735 P	**818212**	AM 700 P	**818169**	AM 700 T	**818172**

(4) DIN EN 779

818140	**818198**	**818141**	**818142**	**818143**	**818199**	**818181**
LV 200	**LV 250**	**LV 300**	**LV 400**	**LV 500**	**LV 600**	**LV 700**
GV 200	GV 250	GV 300	GV 400/500	GV 400/500	GV 600/700	GV 600/700
yes	yes	yes	yes	yes	yes	yes
58	63	115	250	315	580	740
40	42	90	195	235	385	530
-	-	-	-	-	-	-
yes	yes	yes	yes	yes	yes	yes
46	48	90	220	260	430	580
30	31	60	165	195	250	410
-	-	58	125	165	255	390
-	-	51	115	145	210	330
19/18	19/18	19/18	45/39	50/61	64/80	115/155
0.11	0.11	0.11	0.3	0.24/0.27	0.39/0.45	0.51/0.68
42	42	51	52	65	60	70
27500	27500	27500	40000	40000	40000	40000
2650/3100	2650/3100	2650/3100	2760/3030	2740/3120	2550/2800	2550/2750
yes	yes	yes	yes	yes	yes	-10°C ... +50°C
yes	yes	yes	yes	yes	yes	yes
yes	yes	yes	yes	-	yes	-
-	-	-	-	**818218**	-	**818194**
yes	yes	yes	yes	yes	yes	yes
-	-	-	-	yes	-	yes
yes	yes	yes	yes	-	yes	-
-	-	-	-	-	-	-
yes	yes	yes	yes	yes	yes	yes
yes	yes	yes	yes	yes	yes	yes
-	-	yes	yes	yes	yes	yes
yes	yes	yes	yes	yes	yes	yes

Notes

e-Catalogue / Application guide Intro
Insulated boxes A
Insulated wall mounting cabinets B
Wall mounting system enclosures C
Sheet steel distribution boards D
Pedestals E
Subterranean enclosures F
Climate control G
General accessories H
General characteristics I
Index X

Compression glands - Metric - IP68 in polyamide (RAL 7035)

Metric size D2	Drill ∅ (mm)	Clamping range D1 (mm)	L1	L2	L3	E	Keywidth Sw (mm)		
M12	12.5	4 - 6	21	12	8	17	15	851650	50
M16	16.5	5.5 - 8	25	15	8	21	19	851651	50
M20	20.5	7 - 12	35	20	10	27	24	851652	50
M25	25.5	12 - 18	36	22	12	36	33	851653	25
M32	32.5	17 - 25	42	25	12	47	42	851654	10
M40	40.5	22 -32	46	30	13	58	53	851655	10
M50	50.5	32 - 38	47	30	13	66	60	851656	5
M63	63.5	38 - 44	47	30	14	71	65/68*	851657	5

*body 68 / nut 65

Temperature : - 30° C up to + 100° C

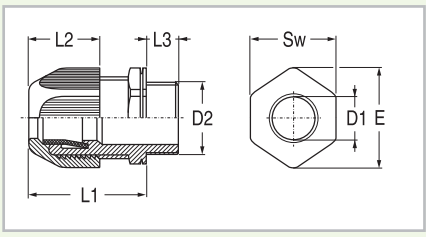

Lock nuts in polyamide - Metric - (RAL 7035)

		Metric size D1	Width D3	Thickness M2	Keywidth Sw (mm)
851664	100	M12	19	5	17
851665	100	M16	25	5	22
851666	100	M20	29	6	26
851667	100	M25	36	6	32
851668	50	M32	46	7	41
851669	25	M40	54	7	50
851670	25	M50	67	8	60
851671	25	M63	83	8	75

Temperature : - 40° C up to + 100° C

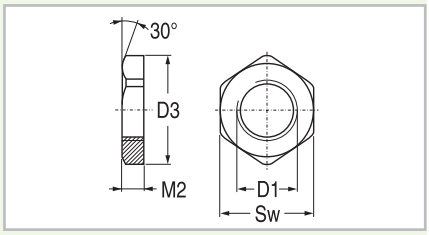

Compression glands - Metric - IP54 in polystyrene (RAL 7035)

Metric size D2	Drill ∅ (mm)	Clamping range D1 (mm)	L1	L2	L3	E	Keywidth Sw (mm)		
M12	12.5	3 -6	22	13.6	8	18	16	851658	50
M16	16.5	5 - 9,5	24	14.2	8	23	21	851659	50
M20	20.5	8 - 13	27	16.2	9.5	28	25	851660	50
M25	25.5	10 - 16	30	18.2	10	33	30	851661	50
M32	32.5	14 -20	35	21.5	12	40	36	851662	10
M40	40.5	19 - 27	43	24.5	12	51	46	851663	10

Temperature : - 30° C up to + 60° C

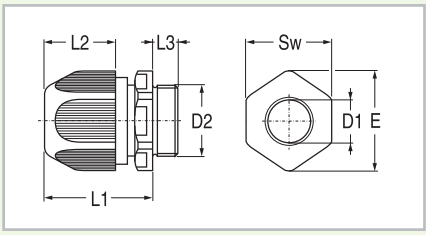

Blanking plugs - Metric - IP54 in polyamide (RAL 7035)

		Metric size D1	Width D2	Thickness L1	Thread L2 length (mm)
851672	100	M12	15	10	6
851673	100	M16	20	10.5	6
851674	100	M20	24	10.5	6
851675	100	M25	30	13	8
851676	100	M32	37	13.5	8

Temperature : - 40° C up to + 100° C

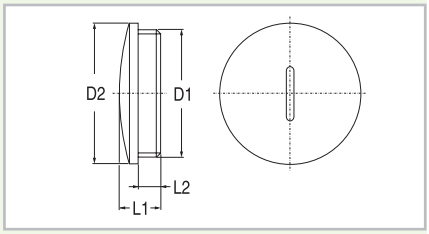

Reducing ring - Metric - IP54 in polyamide (RAL 7035)

Metric size D1 - D2	Thread (mm) L1	Thread (mm) L2	Keywidth Sw (mm)		
M20 - M16	12.5	8.5	24	851680	50
M25 - M20	14	8	29	851681	50
M32 - M25	16	10	36	851682	25
M40 - M32	16	10	46	851683	10
M50 - M40	18	12	55	851684	5
M63 - M50	18	12	68	851685	5

Temperature : - 40° C up to + 100° C

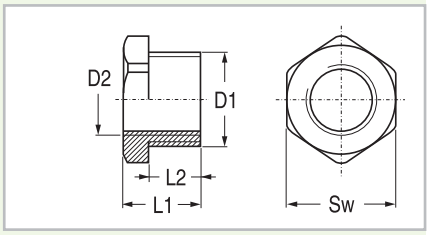

Universal cable entries - Metric - IP54 in polyethylene (RAL 7035)

Metric size D1	Cable section D2	Cable section (mm)	Thread in mm L1	Thread in mm L2		
M16	20	6 - 8	16	8	851686	100
M20	24	9 - 12	19	10	851687	100
M25	30	11 - 17	22	12	851688	50
M32	37	16 - 22	25	14	851689	25
M40	46	19 - 25	28	16	851690	10

Temperature : - 40° C up to + 80° C

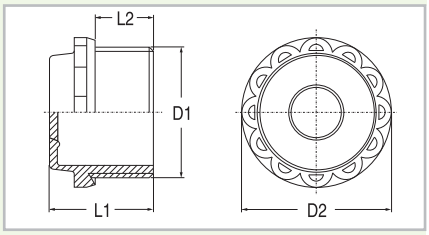

Connection thread grummet - Metric - in polyethylene (RAL 7035)

		Metric size	S (mm)	D1 (mm)	D2 (mm)
851691	100	M12	1.5	11.6	16
851692	100	M16	1.5	15.6	21
851693	100	M20	2	19.4	25
851694	100	M25	2	24.4	32
851695	100	M32	2	31.4	39
851696	100	M40	2	39.4	47
851697	100	M50	3	49.3	57
851698	100	M63	3	62.2	70

Temperature : up to + 70° C thickness s - diameter d1 - diameter d2

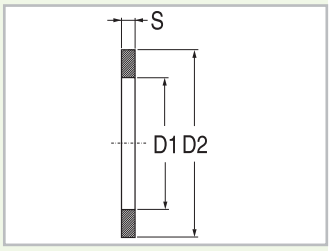

Universal cable entries (grey)

Max. Ø cable	PG	Drill Ø X (mm)	Colour		
18	16	23	grey	610130	25
24	21	29	grey	610132	25
32	29	38	grey	610133	25
49	42	54	grey	852191	1

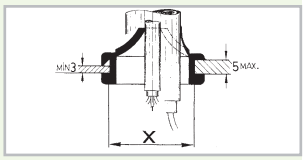

Min. Ø cable	Max. Ø PG	Drill Ø X (mm)	Colour		
12	48	55	grey	851096	20
12	30	35	grey	851097	20
12	36	45	grey	851098	20
22	66	75	grey	851099	10
22	58	65	grey	851100	10

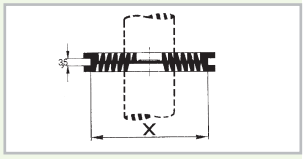

Terminals

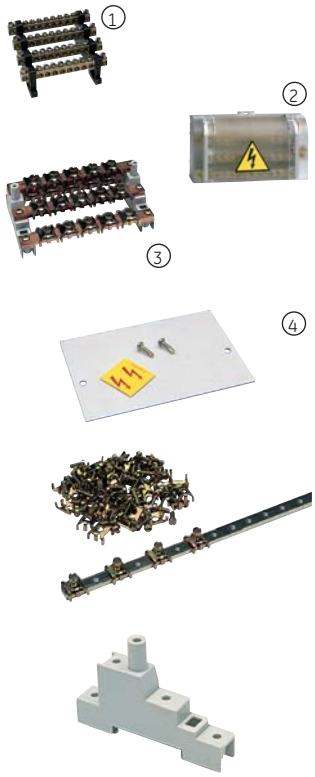

①	610022	12
4 pole terminal - 6.5 x 9 mm bars 63A		
For DIN-rail mounting		
②	617992	1
4 pole terminal with cover - 160A		
For DIN-rail mounting		
③	610020	12
4 pole terminal - 12 x 5 mm bars 160A		
For DIN-rail mounting		
④	610021	12
Protective screen for 610020		
	610017	10
Earth-neutral bar 12 x 5 mm		
Length 1.2 m + 50 clamps + 50 nuts		
Max. distance between supports: 200 mm		
To use with support 851192		
	610018	1
Support for four bars 12 x 5		
Max. distance between support: 200 mm		
For DIN-rail mounting		
Use with above bars		

Cable on bus bar connection

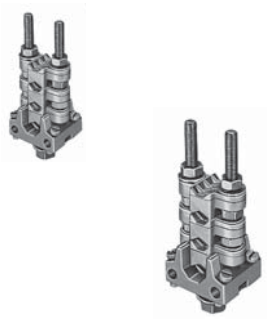

4 connections possibility

- Aluminium cable can be connected
- Bar thickness: max. 12 mm
- Bar width: no limit

35-70 mm²		
1 cable	779220	4
2 cables	779221	4
3 cables	779222	4
+ 4 connections (16 mm²)		
90-150 mm²		
1 cable	779217	4
2 cables	779218	4
3 cables	779219	4
+ 4 connections (25 mm²)		

Insulation hood in rubber

	779224	4
For terminal 35-70 mm²		
	779223	4
For terminal 95-150 mm²		

Branch terminals

	610185	4
Phase bar - black		
6 x 10 mm² and 2 x 16 mm²		
To clip on 12 x 2 mm bar		
	610186	4
Earth bar - green		
6 x 10 mm² and 2 x 16 mm²		
To clip on 12 x 2 mm bar		
	610187	4
Neutral bar - blue		
6 x 10 mm² and 2 x 16 mm²		
To clip on 12 x 2 mm bar		
	610065	4
14 x 16 mm²		
Fixation on DIN-rail		
	851021	10
Earth bar		
12 x 4 with 3 clamps		
Screw fixation		
	851325	5
Neutral clamp with screw fixation		
(also snap on bar 12 x 2)		
	851172	10
Neutral clamp with screw fixation		

Bar on busbar connections

		Main bar	Secondary bar	Total bar thickness Min.	Max.
851125	50	12	12	5	15
851120	10	20	15-20	5-4	26-24
851129	10	30	15-20-30	7-6-5	28-27-26

Cable on bar connection

		Max. Ø Cable cross (mm²)	Bar thickness (mm)	Bar width (mm)
851117	10	10 to 50	5 to 6	30
851118	10	4 to 35	3 to 5	15
851121	10	16 to 120	2 to 5	5 to 12

Terminals for Al and Cu cable 10-16 mm2

4 terminals with max. capacity

Single compression unit: 4 x 4 mm² - 4 x 6 mm² - 4 x 10 mm² - 3 x 16 mm²

Double compression unit is optional

Fixation	Earth terminal	H	10-16 mm²	
with screws	without	46	779212	5
on DIN-profile	without	48	779213	5
with screws	with	46	779214	5
on DIN-profile	with	48	779215	5

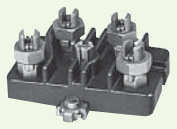

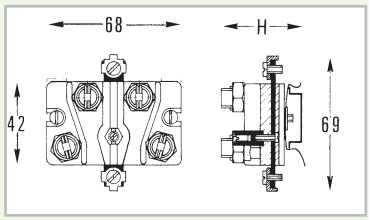

with screws	without	48	890705	5

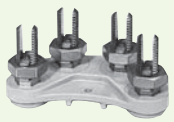

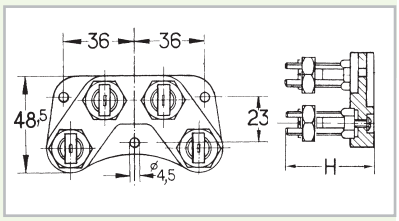

Double compression unit

779216	1

Set of 4 compression nuts

Insulated hood

890704	20

In rubber

Conduct through terminal

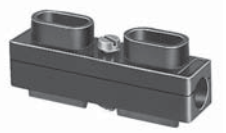

16 mm² with double clamp

Conductors 4 - 16 mm² - 500V

Al conductors 4 - 25 mm²

601231	20

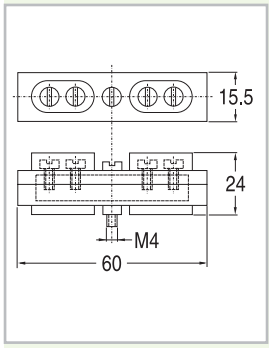

Terminals 25-35 mm2

Without insulation hood

779201	10

1 compression nut • Al/Cu cable

779202	10

2 compression nuts • Al/Cu cable

With insulation hood

779204	10

2 compression nuts • Al/Cu cable

With insulation hood and DIN-rail fixation

779205	10

2 compression nuts • Al/Cu cable

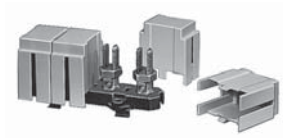

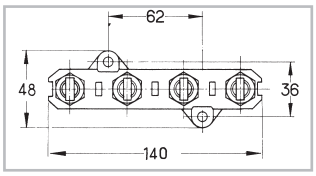

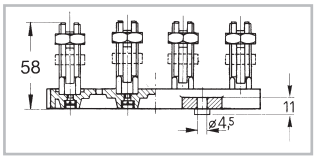

Insulation hood

890838	10

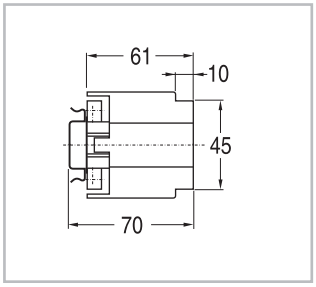

Double compression unit

779203	10

Set of 4 compression nuts

Key

601222	1

Insulated key M20 - 1000V for terminals 25-35 mm².

Cable connection for outer lines

		Section	A	B	C
601227	100	10 mm²	14	24	4.5
601228	50	16 mm²	22	29	5.5
601229	25	35 mm²	25	35	7.5
601230	25	50 mm²	28	43.5	9.0

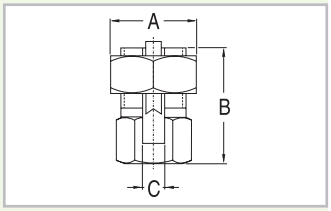

Document pocket - Self adhesive

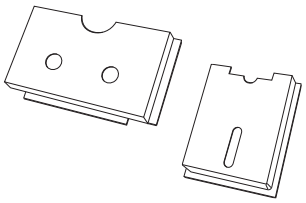

811516	1	
DIN A4	325 W x 180 H	
832000	1	
DIN A5 transparent	155 W x 225 H	

Marking strip

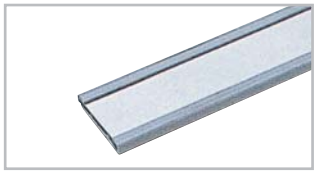

851321	1m

Self-adhesive

Blanking plates

610142	10

For 4 modules break off 1/2 module

828056	1m

Spare blank plate for screening off rectangular openings

Handle ⧈

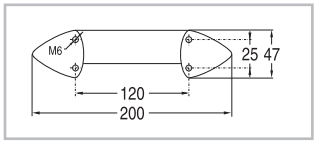

851244	1

Heigth 50 mm

With reinforced rib + screws

Made of Vyncolite

Enclosure lighting

230V 50/60Hz 11W

With magnetic attachment

355 x 65 x 65 mm

818192	1

With "Schuko" socket 250V/16A

818112	1

With "CEBEC" socket 250V/16A

Without cover

818191	1

Cover for lamp

Surface-mounted windows ⧈

Including drill template and mounting

①	861395	1
77 x 60 mm - 2 mod.		
①	861396	1
77 x 96 mm - 4 mod.		
①	861397	1
77 x 130 mm - 6 mod.		
①	861398	1
77 x 163 mm - 8 mod.		
①	861399	1
77 x 200 mm - 10 mod.		
②	866001	1
Screwed ⧈ IP67		

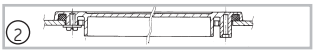

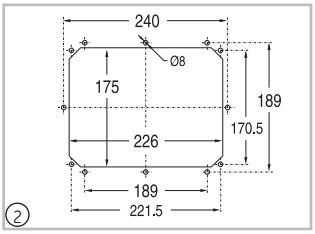

③	890837	1
Hinged, with gasket ⧈ IP55		

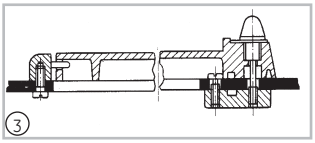

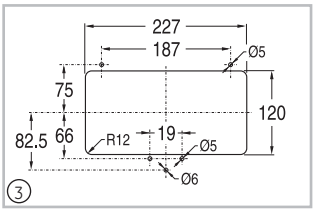

④	866002	1
Screwed ⧈ IP67, with indication strip		

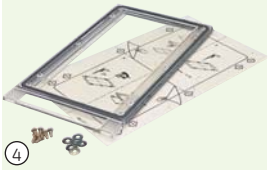

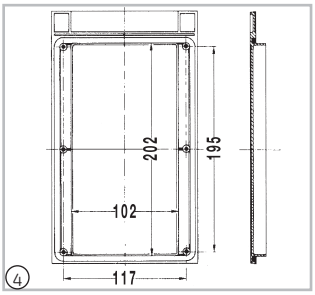

⑤	866003	1
Screwed ⧈ IP67, without indication strip		

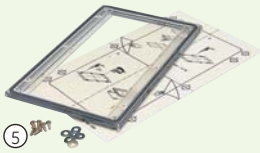

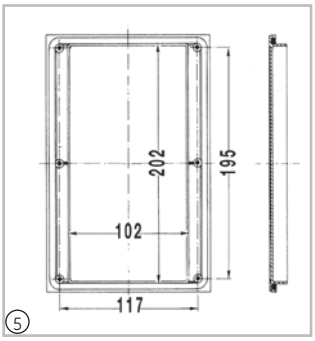

Height extension studs

L (mm)	Ø A	Ø B	Type M4	
10	M4	M4	890800	50
15	M4	M4	890801	50
20	M4	M4	890802	50
25	M4	M4	890803	50
30	M4	M4	890804	50
60	M4	M4	890805	50
65	M4	M4	890806	50
97	M4	M4	890807	50
102	M4	M4	890808	50

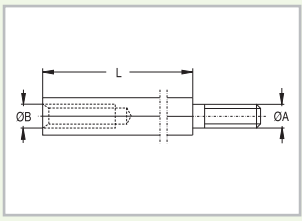

Height extension studs

L (mm)	Ø	Type M6	
15	M6-M6	811337	100
20	M6-M6	811338	100
25	M6-M6	811454	100
30	M6-M6	811339	100
35	M6-M6	811455	100
45	M6-M6	811456	100
55	M6-M6	811457	100
65	M6-M6	811458	100
70	M6-M6	811340	100
80	M6-M6	811460	100
100	M6-M6	811461	100
120	M6-M6	811341	100

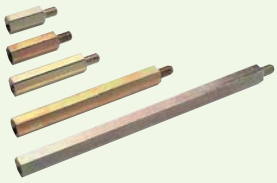

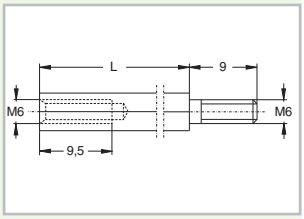

Height extension studs

Type M6		L (mm)	Ø
811342	100	60	M6-M6
811343	100	30	M6-M6

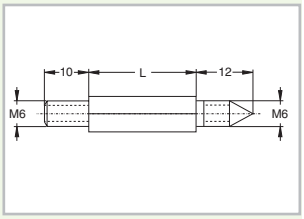

Type M4-M6			
811336	100	15	M6-M4

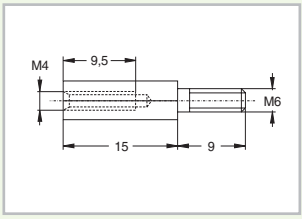

Insulated nuts (grey RAL 7035)

			A	B	C	D	ØE
601223	100	M4	15	13,2	8,5	M4	11
601224	100	M5	18	17,0	10	M5	14
601225	100	M6	22,3	20,4	9	M6	17
601226	50	M8	25,3	24,2	10	M8	20

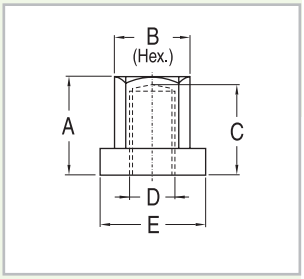

Screws

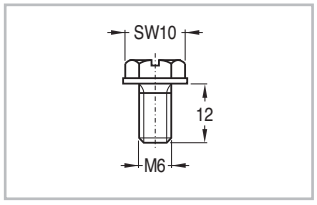

811483	100

Screws M6 with flanges

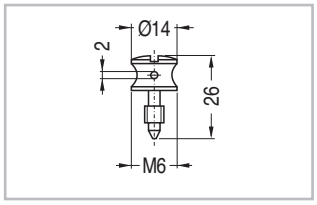

811451	100

Screws M6 in PVC for cover plate (sealable)

Aluminium profiles

Profile length 3 m

811417	1

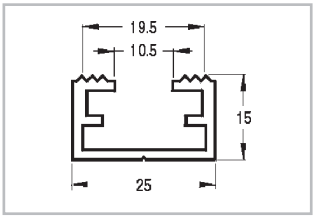

Brackets

L	A	C	E		
25	10	9,5	-	**811477**	100
40	24	9,5	-	**811478**	100
80	64	9,5	-	**811479**	100

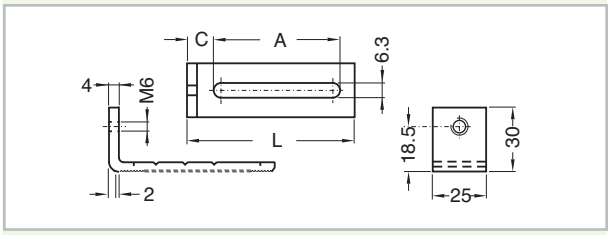

120	64	49,5	41,5	**811480**	100

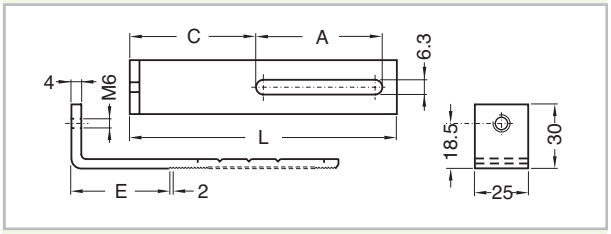

Galvanised profiles

890848 1

Profile C 15 x 8 x 1

Length: 3 m

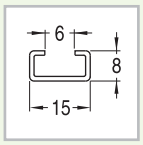

890847 1

DIN profile 35 x 7.3 x 1

Length: 3 m

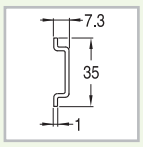

811619 1

Profile C 30 x 15 x 1.5

Length: 3 m

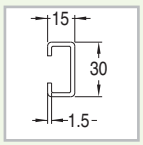

811363 25

Sliding nuts for C 30 x 15

M6

811365 50

Sliding nuts for C 25 x 10

M6

811263 1

Cu profile 12 x 5 with threat M 5

Length: 3 m

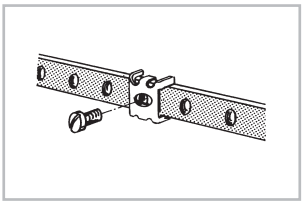

851123 10

Connectors + screws M 5 x 13

Max. 2 x 10 mm^2 per connector

Nuts in metal

811435 100

M6

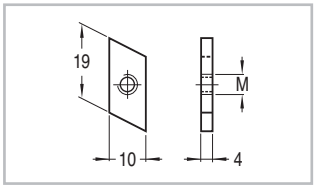

811438 100

M4

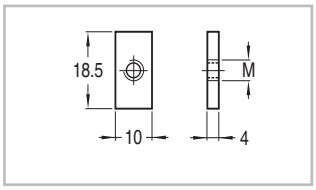

811442 100

M6

811446 100

M6

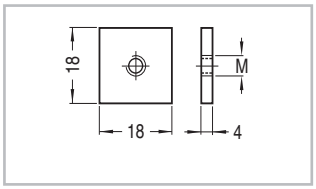

811447 100

M8

Nuts in PVC

811443 100

M6

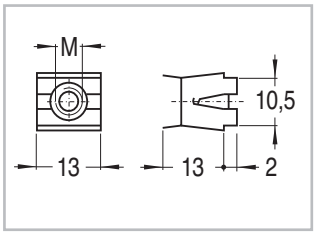

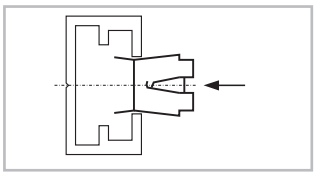

Sliding nuts

For perforated mounting plate

831328 50

Bolt M4

831329 50

Bolt M5

831330 50

Bolt M6

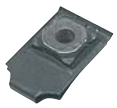

Heigth extension studs

610312 10

For use on symmetrical

DIN-rail

Heigth: 21 mm

Fixation material

890835	10

Sliding contact + screw M4

890836	10

Sliding contact + washer + screw M4

890842	10

Set for meter fixation M4

890843	20

Screw M5 for meter fixation

L = 11 mm

890844	20

Screw M5 for meter fixation

L = 21 mm

890849	50

Screw M 4 x 8

890841	50

Sliding nut M4

890850	20

Washer M4

890840	20

Coupling kit

890839	25

Cross fixation for C-profiles

Profiles

Type AB (C 15 x 8)

Profile length	Width of the box		
100 mm	150	**890809**	10
135 mm	185	**890812**	10
250 mm	300	**890817**	10
320 mm	370	**890822**	10
506 mm	555	**890827**	10
550 mm	600	**890831**	10

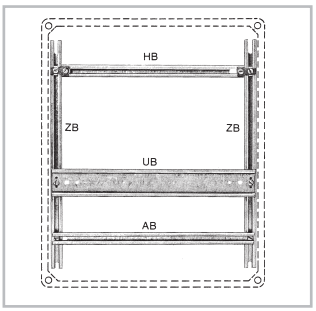

Type HB (C 15 x 8)

Profile length	Width of the box		
110 mm	185	**890813**	10
225 mm	300	**890818**	10
295 mm	370	**890823**	10
481 mm	555	**890828**	10
525 mm	600	**890832**	10

Type UB (1)

Profile length	Width of the box		
90 mm	150	**890810**	10
100 mm	150	**890811**	10
135 mm	185	**890814**	10
200 mm	250	**890816**	10
250 mm	300	**890820**	10
276 mm	300	**890819**	10
320 mm	370	**890824**	10
506 mm	555	**890829**	10
550 mm	600	**890833**	10

(1) DIN 46.277/bl.3

Type ZB (C 15 x 8)

Profile length	Height of the box		
105 mm	185	**890815**	10
220 mm	300	**890821**	10
290 mm	370	**890825**	10
405 mm	485	**890826**	10
476 mm	555	**890830**	10
520 mm	600	**890834**	10

I.2 **Agreements**

I.2 **Abbreviations**

I.3 **Advantages of polyester enclosures**

I.4 **Degrees of protection**

I.6 **Engineering specifications**

I.9 **Legal units**

I.10 **Dimensional drawings**
I.10 Flex-o-Box
I.10 Series 55
I.11 Street lighting pole boxes
I.12 MultiBox
I.14 MultiBox Xtra
I.16 APO
I.15 MultiCab
I.20 ARIA
I.22 PolySafe
I.24 VMS
I.28 Fix-o-Rail Senior
I.29 QuiXtra *630*
I.30 Modula Plus
I.32 EH1
I.33 EH2
I.34 EH3
I.37 EH3/GD
I.39 EH4
I.41 EH6
I.42 RVS
I.44 UC-Cabinet
I.45 Ventilation

I.48 **Specifications for tender documents**
I.48 MultiBox
I.49 MultiBox Xtra
I.50 APO
I.51 MultiCab
I.52 ARIA
I.53 PolySafe
I.54 VMS
I.55 Fix-o-Rail Senior
I.56 QuiXtra *630*
I.58 Modula Plus
I.60 EH1
I.61 EH2
I.61 EH3/F & EH3/AP
I.62 EH3/GD
I.62 EH4
I.63 EH6
I.64 RVS
I.65 UC-Cabinet

I.66 **Power dissipation values**
I.67 MultiBox
I.68 APO
I.70 ARIA
I.72 PolySafe
I.74 VMS
I.75 Fix-o-Rail Senior
I.76 QuiXtra *630*
I.80 Modula Plus
I.84 EH1 • EH2 • EH4
I.85 EH3 • EH6
I.86 RVS

Agreements

	AS	Australia
	ÖVE	Austria
	CEBEC	Belgium
	CSA, CEC	Canada
	DEMKO	Denmark
	SETI	Finland
	UTE	France
	VDE	Germany
	BS	Great Britain
	ASTA	Great Britain
	IMQ	Italy
	KEMA	Netherlands
	NEMA	North America
	NEMKO	Norway
	CERTIF	Portugal
	AEE	Spain
	SEMKO	Sweden
	SEV	Switzerland
	UL, NEC, OSHA	U.S.A.
	UR	U.S.A.
	Lloyd's Register of Shipping	
	Germanischer Lloyd	

Abbreviations

Al	Aluminium
ASTM	American Society for Testing Materials
BS	British Standards
CENELEC	European Committee for Electrotechnical Standardisation (Comité Européen de Normalisation Electronique)
CCA	Cenelec Certification Agreement
Cu	Copper
DIN	Deutsche Institut für Normung e.V.
E . .	Edison thread
IEC	International Electrotechnical Commission
IP..	Protection degree
M..	Metric thread
NBN	Belgian Standards (Norme belge / Belgische norm)
NEN	Dutch Standards (Nederlandse norm)
NF	French Standards (Norme française)
1P	Unipolar
2P	Bipolar
3P	Tripolar
4P	Tetrapolar
PG..	Thread following DIN 40430 (Panzerrohrgewinde)
RAL..	Colour Standard (Ausschuss für Lieferbedingungen und Gütesicherung)
VDE	Verband Deutscher Elektrotechniker

Advantages of polyester enclosures

Temperature resistant

Temperature resistant

Corrosion resistant

Self extinguishing

Total insulation

Impact resistant

High IP rating

Lightweight

Normal corrosion resistance
Acid rain

Saline corrosion resistance
Sea shore

Extreme corrosion resistance
Industry

Impact resistance
Up to 50J

Total insulation
Polyester enclosures provide protection against indirect electrical contact

Maintenance free

Self extinguishing
Limit fire propagation

Fire retardant
Protect equipment

Halogen-free
No toxic gas release in a fire

Coloured in mass

U.V.-resistant

High IP rating
Gasket tongue/groove arrangement
Polyurethane gasket
- no joint
- gasket stick on bottom and sides

Temperature resistant
Resist to wide temperature variations without modification of properties
(FRP: -50°C to +150°C)

Lightweight
Weight: 1/4 of steel
Easy to handle

Constant quality
Because of machine moulding

Installer friendly
Easy to work (standard tools)
Easy to install (mounting feet, lightweight)
Easy to maintain (when scratches occur, some vaselin gives back appearance of FRP)

Aesthetic
Suitable for indoor/outdoor designs

Condensation limiting
Reduced change of inside condensation versus metallic enclosures

Technical data
- on protection degrees, see pages I.4-I.5
- on materials, see page I.6-I.8

Degrees of protection of the electrical equipment up to 1000V a.c. and 1500V d.c.

IP X1 X2 according to IEC 60529 (2001) and EN 60529 (1991)

X1	Protection of persons against contact with live parts Protection of equipment against ingress of solid foreign bodies	
	Test	
0		No protection
1		Against access with hand and ingress of solid objects greater than 50 mm
2		Against access with finger and ingress of solid objects greater than 12 mm
3		Against access with tools and ingress of solid objects greater than 2.5 mm
4		Against access with wires of strips and ingress of solid objects greater than 1 mm
5		Complete protection against contact with live parts and ingress of harmful deposits of dust
6		Complete protection against contact with live parts and ingress of dust

X2	Protection against ingress of liquids	
	Test	
0		No protection
1		Against vertically falling drops
2		Against drops of falling liquid at an angle up to 15° from the vertical
3		Against water falling in rain at an angle up to 60° from the vertical
4	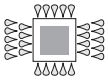	Against water splashed from any direction (over 360°)
5		Against water jets from any direction (over 360°)
6		Against water projected in powerful jets as from heavy seas
7		Against immersion in water under defined conditions of pressure and time
8		Against continuous submersion in water

After 10 strokes, the enclosure should show neither visible crack of damage that might jeopardize the protection degree IP X1X2

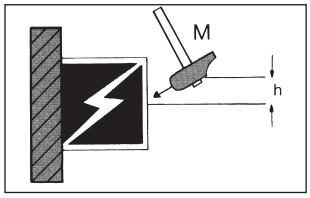

* = no protection

X3	Protection against external mechanical damage According to NBN C20-001 Impact strength		
	Hammer mass (kg)	Fall (m)	Impact energy (J)
0.5	M = 0.15	h = 0.1	0.2
1	M = 0.15	h = 0.15	0.3
1.5	M = 0.15	h = 0.2	0.4
2	M = 0.15	h = 0.25	0.5
3	M = 0.25	h = 0.2	0.6
4	M = 0.5	h = 0.2	1
5	M = 0.5	h = 0.4	2
6	M = 1.5	h = 0.27	4
7	M = 1.5	h = 0.4	6
8	M = 5	h = 0.2	10
9	M = 5	h = 0.4	20
10	M = 15	h = 0.235	35
11	M = 15	h = 0.4	60

IK	Protection against external mechanical damage According to EN 62262 and IEC 62262 Impact strength		
	Hammer mass (kg)	Fall (mm)	Impact energy (J)
00	*	*	*
01	M = 0.25	h = 56	0.14
02	M = 0.25	h = 80	0.2
03	M = 0.25	h = 140	0.35
04	M = 0.25	h = 200	0.5
05	M = 0.25	h = 280	0.7
06	M = 0.25	h = 400	1
07	M = 0.5	h = 400	2
08	M = 1.7	h = 300	5
09	M = 5	h = 200	10
10	M = 5	h = 400	20
	M = 10	h = 500	50

Explanation

The standard NBN C20-001/A was valid untill April 15, 1997. The tables mentioned above are classified according to the impact energy.

The IPxx-X3 values and the IK-values can not just be compared to each other, because there exists a difference between the form of the hammer and the number of tests. In that case, it is impossible to set up a conversion table. Notice that no value was defined to replace the IPxx-11. If a shock resistance higher than IK10 is needed, the new standard will only provide a recommendation.

The IK-value is shown with a figure of two numbers to exclude the confusion with the IPxx-X3 value.

Degrees of protection

Type	Intended use and description	Type	Intended use and description	Type	Intended use and description
1	Indoor use, primarily to provide a degree of protection against limited amounts of falling dirt.	4	Indoor or outdoor use, primarily to provide a degree of protection against windblown dust and rain, splashing water, hose-directed water and damage from external ice formation.	12 12K	Indoor use, primarily to provide a degree of protection against circulating dust, falling dirt and dripping non-corrosive liquids.
2	Indoor use, primarily to provide a degree of protection against limited amounts of falling water and dirt.	4X	Indoor or outdoor use, primarily to provide a degree of protection against corrosion, wind blown dust and rain, splashing water, hose-directed water and damage from external ice formation.	13	Indoor use, primarily to provide a degree of protection against dust, spraying of water, oil and non-corrosive coolant.
3	Outdoor use, primarily to provide a degree of protection against rain, sleet, wind blown dust and damage from external ice formation.	5	Indoor use, primarily to provide a degree of protection against settling airborne dust, falling dirt and dripping noncorrosive liquids.		
3R	Outdoor use, primarily to provide a degree of protection against rain, sleet and damage from external ice formation.	6	Indoor or outdoor use, primarily to provide a degree of protection against hose-directed water and the entry of water during occasional temporary submersion at a limited depth and damage from external ice formation.		
3S	Outdoor use, primarily to provide a degree of protection against rain, sleet, windblown dust and to provide for operation of external mechanisms when ice laden.	6P	Indoor or outdoor use, primarily to provide a degree of protection against hose-directed water, the entry of water during prolonged submersion at a limited depth and damage from external ice formation.		

Rating of enclosures following UL 50 and CSA C22.2 no. 94-M91

Enclosure	1	2	3	3R	3S	4	4X	5	6	6P	12	12K	13
APO													
With polyester cover	•		•	•		•	•		•	•	•		•
With polycarbonate cover	•		•	•		•	•				•		•
With hinged cover	•		•	•		•	•		•		•		•
With polyester cover and stainless steel hinges	•		•	•		•	•		•	•	•		•
With polycarbonate cover and stainless steel hinges	•		•	•		•	•				•		•
With polyester cover and plastic hinges	•		•	•		•	•		•	•	•		•
With polycarbonate cover and plastic hinges	•		•	•		•	•				•		•
With polyester cover and depth extension frame	•		•	•		•	•		•	•	•		•
With polycarbonate cover and depth extension frame	•		•	•		•	•				•		•
With hinged cover and depth extension frame	•		•	•		•	•		•		•		•
With polyester cover, depth extension frame and stainless steel hinges	•		•	•		•	•		•	•	•		•
With polycarb. cover, depth extension frame and stainless steel hinges	•		•	•		•	•				•		•
With polyester cover, depth extension frame and plastic hinges	•		•	•		•	•		•	•	•		•
With polycarbonate cover, depth extension frame and plastic hinges	•		•	•		•	•				•		•
VMS													
Single	•	•	•	•	•			•			•	•	
Modular system	•	•	•	•	•			•			•	•	
Modular system using coupling set 853063	•	•		•									
With hinged cover	•	•						•			•	•	
With external plastic hinges	•	•											
ARIA													
Standard	•		•	•	•	•	•				•		•
PolySafe													
Factory assembled with single door	•		•	•	•	•	•				•	•	•
Factory assembled with double door	•		•	•	•	•	•				•	•	•
Factory assembled coupled cabinets	•		•	•	•	•	•				•	•	•
Factory assembled with drain ventilators	•		•	•	•								

Plastics

A plastic is a material that can be formed and shaped into finished articles using heat (thermoformed). It has a molecular structure that consists of very long chains of polymers formed by the interaction of many molecules (monomers) or molecular pairs.
A distinction is made between thermoplastics and thermosettings.

Thermoplastics
Made by injection of the molten plastic into a cool mould. Parts formed from thermoplastics can be repeatedly softened by an increase of temperature. Most thermoplastics are soluble in a suitable organic solvent.

Thermosettings
Made by forming the plastic objects in a hot mould. Once formed, it becomes substantially infusible and also insoluble because of the crosslinked molecular structure. Thus products from materials made using thermosettings do not melt upon heating and are practically insoluble to most commercial solvents. Some softening under the effect of commercial solvents is however possible.

Advantages of plactics

Double insulation ensures perfect safety against direct and indirect contact.
The frame does not need **to be earthed.**
Unlikely metals, plastics are **corrosion-resistant.**
The enclosures are homogeneous, thus they do **not require any maintenance** even when scratched, as only more of the same materials will be exposed.
Due to their **light weight** plastic enclosures can be very easily handled and installed.

Technical data of plastics

Properties	Standards	Unit	Polyester glassfibre reinforced
Mechanical			
Impact strength	ISO179	kJ/m^2	55
Notched impact strength	ISO 179	kJ/m^2	55
Flexural strength	ISO 178	MPa	150
Tensile strength	ISO 3268	MPa	50-60
Electrical			
Tracking resistance	IEC 112	V/50dr	KC600
Surface resisitivity	IEC 93	Comparative fig.	12
Special resistivity	IEC 93	Ω cm	$\geq 10^{12}$
Dielectric strength	IEC 243	kV/mm	18
Physical			
Deflection temperature	ISO 74/A	°C	> 250
Vicat softening point	ISO 306/B50	°C	-
Temperature resistance	continuous	°C	-50 to +130
Colour fastness	ISO 877	Blue wool scale 1-8	8
Tropicalisation and resistance to mould and fungus growth	IEC 68-2-3	-	no degradation
Water absorption	ISO 62/1 96h	mg	45
Density	ISO 1183	kg/dm^3	1.75
Flame resistance			
Oxygen index	ISO 4589	% O_2	26
Flammability	UL 94 (3 mm)		94 HB
Hot wire resistance	IEC 695-2-11	°C	960
Toxicity of fumes	ISO 4615	% Cl	halogen-free

Special features

Polyester (UP)
A thermoset derived from unsaturated polyester resins reinforced with glass fibres. Readily worked with common tools such as drills, punches and saws. Polyester enclosures are ideally suited for outdoor installations and use in hot, humid and/or chemically agressive environments. The glassfibre has a minimum diameter of 12 µ and is considered as not harmfull.

Polystyrene and related polymers (PS/SB/ABS)
Polystyrene is a general purpose thermoplastic with good electrical properties.

Where higher impact resistance is needed, styrene-butadiene (SB) or acrylonitrile-butadiene-styrene (ABS) is used.

Polyurethane (PUR)
Thermosetting material, with good chemical resistance. In its foamed and elastic form it is used for gaskets.

Neoprene rubber (CR)
Elastomer with excellent chemical resistance and excellent flame resistance.

Ethylene-propylene-terpolymer (EPDM)
Elastomer with good chemical resistance and excellent aging resistance.

Polycarbonate (PC)
Thermoplastic with high impact resistance over a wide temperature range. The UV-stabilised grades can be used for outdoor applications.

Polyphenylene oxide (PPO)
Thermoplastic with good mechanical rigidity and excellent dimensional stability.
This material is normally not used for outdoor applications because of its tendency to discolour when exposed to UV-radiation.

Polyamide (PA)
Thermoplastic with good mechanical, thermal and electrical properties. It is resistant to most commonly used solvents, but is readily attacked by acids.

Polybuthyleneterephtalate (PBT)
Thermoplastic with good electrical, chemical and thermal resistance.

Polyvinylchloride (PVC)
Thermoplastic with good resistance to weathering and excellent flame resistance.

Polycarbonate	Polycarbonate glassfibre reinforced	PPO	PA6 (2.5% humidity)	PVC
no rupture	50	40	40	25
30-50	15	15	25	20
no rupture	160-170	no rupture	no rupture	no rupture
65-70	100	37	60	65
KC200	KC175	KC175	KC600	KC600
15	15	> 12	12	15
$\geq 10^{16}$	$\geq 10^{16}$	$\geq 10^{14}$	$\geq 10^{12}$	$\geq 10^{13}$
35	39	16	34	30
135	145	95	60	50
145-150	160-165	109	210-220	70
-35 to +120	-35 to +120	-35 to +80	-35 to +100	-10 to +65
4	4	4	8	4
no degradation	no degradation	no degradation	no degradation	no degradation
10	10	7	320	5
1.2	1.33	1.1	1.14	1.38 to 1.40
24.3	34.4	27.5	23	43 to 47
94 V2	94 V1	94 V1	94 V2	94 V0
850	960	960	650	960
halogen-free	halogen-free	halogen-free	halogen-free	halogens

Resistance against submersion at room temperature

Product	UP	PC	PA	PS/SB ABS	PPO	PBT	PVC	PP	PUR	Neo-prene	EPDM
Water	S	S	S	S	S	S	S	S	S	S	S
Seawater	S	S	S	S	S	S	S	S	L	S	S
Acid, diluted	S	S	NS	S	S	S	S	S	L	S	S
Acid, conc.	NS	L	NS	L	S	L	S	S	NS	L	S
Acid, oxid.	NS	NS	NS	L	L	NS	L	L	NS	NS	NS
Alkalis, diluted	L	L	S	S	S	L	S	S	L	S	S
Alkalis, conc.	NS	NS	S	S	L	L	S	S	NS	S	S
ammoniac								S			S
Salt, aqueous sol.	S	S	S	S	S	S	S	S	S	S	S
chlorides			L					S			
Alcohols	S	L	S	L	S	L	S	S	L	S	S
Ketones	L	NS	S	L	NS	NS	NS	S	NS	L	S
acetone	L	NS	S	NS	NS	L	NS	S	NS	S	S
Esters	L	NS	L	NS	NS	L	NS	S/L	L	NS	L
n-butylacetate	L	NS	S	NS	NS	L	NS	L	NS	NS	L
Ethers	L	NS	S	NS	NS	L	L	S	L	L	NS
Hydrocarbons aliphatic	S	S	S	NS	L	S	S	S	L	L	NS
white spirit	S	S	S	NS	L	S	S	S	L	L	NS
Hydrocarbons aromatic	NS	NS	S	NS	NS	L	NS	NS	L	NS	NS
xylene	L	NS	S	NS	NS	S	NS	L	NS	NS	NS
Hydrocarbons halogenated	L	NS	L	NS	NS	L	NS	L/NS	NS	0NS	NS
chlorobenzene	NS	NS	NS	NS	NS	NS	NS	S	NS	NS	NS
Mineral oils	S	NS	S	NS	S	S	S	S	S	L	NS
Oils and fats	S	NS	S	L	S	S	S	S	S	S	NS
Propylene glycol	L	S	S	S			S	NS	S		
Nitrobenzene	NS	NS	L	NS	NS	NS	NS	S	NS	NS	L
Phenol	NS	NS	NS	NS	NS	NS	L	S	NS	L	S
Temperature limits (for continuous use)											
min. (°C)	-50	-35	-35	(1)	-35	-35	-10	-5	-30	-30	-50
max. (°C)	130	120	100	70	80	120	65	65	100	90	120

By resistance is meant the maintenance of isolation and mechanical properties necessary for good functioning.
An eventual changing outlook is not taken into consideration (ex. loose of gloss).

Abbreviations

S = satisfactory
L = limited
NS = not satisfactory

UP: polyester
PC: polycarbonate
PA: polyamide
PS: polystyrene
SB: styrene-butadiene
ABS: acrylonitrile-butadiene-styrene

PPO: polyphenylene oxide
PBT: polybutyleneterephtalate
PVC: polyvinylchloride
PP: polypropylene
PUR: polyurethane
EPDM: ethylene-propylene-terpolymer

(1) PS (standard): -10°C
PS (higher impact): -20°C
ABS: -20°C
SB: -20°C

For satisfactory and lasting trouble-free operation of outdoor enclosures, the following precautions are recommended

Material selection

Select proper enclosure material and gasket:
- sufficient U.V. resistance
- resistance to normal corrosion (e.g. acid rain)
- resistance to saline corrosion (e.g. sea shore)
- resistance to extreme corrosion (e.g. industrial sea shore)

Glassfibre reinforced polyester enclosures satisfy all those requirements.

Ice stagnation

Avoid water stagnation on top of enclosures.
Icing, de-icing and dirt will deteriorate gaskets by allowing corrosive deposits in cracks.
For Superpolyrel 400 we recommend the use of a rainhood.

Ventilation

If condensation inside enclosure will be harmful, there are two ways to avoid it:
- natural ventilation, made by creating openings in the enclosure to allow air to circulate and remove moisture. This can be done if the required protection does not exceed raintightness
- if the enclosure must be raintight and watertight (IP55 or more), heating of the enclosure may be necessary to remove moisture.

Legal units (SI), conversion and formulas

Quantity	Symbol	Formule for proportions	Unit	Abbreviation (symbol)	Related	Abbreviation (symbol)	Other units	Symbol	Conversion
Length	l		metre	m		km, hm, dam dm, cm, mm, µm, nm	Inch Foot	in ft	1 in = 2.54 cm 1 ft = 12 in = 30.48 cm
Width	w		metre	m					
Height, depth	h		metre	m					
Radius	r		metre	m					
Diameter	d		metre	m					
Way,waylength	s		metre	m	lightyear	ly	mile yard	mile yd	1 ly = 9.46 x 10^{12} km 1 mi = 1609 m ; 1 mi_{naut} = 1852 m 1 yd = 0.9144 m ; 1 mi = 1760 yd
Wavelength	λ		metre	m					$\lambda = c_l / f$
Area	A (S)	A = l.b	square metre	m^2	are	a, ha, ca km^2, cm^2, mm^2	square inch	in^2	1 ca = 1 m^2 ; 1 a = 100 m^2 1 ha = 100 a = 10 000 m^2 1 in^2 = 6.45 cm^2
Volume	V	V = l.b.h	cubic metre	m^3, dm^3, cm^3, mm^3	liter stere (wood)	l hl, dl, cl , ml 1 hl = 100 l st	gallon barrel pint	gal bbl pt	1 l = 1 dm^3 ; 1 gal = 4.546 l 1 bbl = 42 gal = 158.9 l (oil Am) 1 pt = 0.5683 l 1 st = 1 m^3
Plane angle	α, β, φ		radian	rad, °	degree,min,sec rotation	° ' " rot.			1° = π/180 rad = 60 ' = 3600 " 1 tr = 2 rad = 360°
Mass	m		kilogram	kg	ton	t	pound ounce	mg, µg lb oz	1 t = 1000 kg 1 lb = 16 oz = 0.4536 kg 1 oz = 28.35 g
Time **Period**	t T		second second	s s	minute, hour, day	min., h, d, ms, µs, ns			1 day = 24 h ; 1 h = 60 '
Frequency	f	f = 1 / T	Hertz (=1/s)	Hz		kHz,MHz,GHz			
Rotationfrequency **(No of revolutions)**	n n	n = β / t		rad/s			rpm, r/s rpm, r/s		1 rpm = π / 30 rad/s
Angular velocity	ω	ω = β = t		rad/s					1 rpm = 0.10472 rad/s
Linear velocity	v, u, w	v = s / t		m/s	kilometer/hour	km/h	miles/hour	miles/h	1 mile/h = 1.61 km/h
Light velocity	c								c_l = 299 792 km/s (vacuum)
Sound velocity	c								c_g = 332 m/s in air at 0°C
Acceleration	a	a = δv/δt		m/s^2	earth acceleration	g			g = 9.81 m/s^2 (Belgium)
Output	q	q = V/t		m^3/s					
Force **Weight**	F G	F = m.a G = m.g	Newton Newton	N (kg.m/s^2) N		kN, MN	[kg-force]	[kgf]	[1 kgf = 9.81 N]
Pressure	p	p = F / A(S)	Pascal	Pa (N/m^2)	hecto Pascal	hPa	bar mmmerc.col. mmwat.col. lb/squareinch	bar mm Hg mm H_2O psi	1 bar = 10^5 Pa ; 1hPa = 100 Pa 1 mm Hg = 133.322 Pa 1 mm H_2O = 9.81 Pa 1 psi = 6.894 kPa
Energy, work	W, E	W = F.s W = P.t	Joule (= N.m) Joule (= W.s)	J (N.m) J	kilowatthour	kJ, MJ kWh	electronvolt 1Ws=1Nm	eV	1 eV = 0.160219.10^{-18} J 1 kWh = 3 600 000 J
Moment of force	M	M = F.r	Newtonmeter	N.m		kN.m,kN.cm,N.cm			
Quantity of heat	Q		Joule	J		kJ, MJ	calory therm	cal therm	1 kcal = 4 187 J 1 therm = 105 506 k J
Power	P	P = W / t P = F.v	Watt	W(=J/s) W(=N.m/s)	kilowatt	mW, kW, MW	horse power kcalory/hour	hp kcal/h	1 hp = 736 W 1 kcal/h = 1.163 W
Thermodynamic temperature	T, θ		degree Kelvin	°K	degree Celsius	°C	degree Fahrenheit	°F	1°C = 1 K ; x°C = (x + 273.15)K 1°F = 5/9 °C ; x°F = 5/9(x-32)°C
Electrical current	I		ampere	A		µA, mA, kA			
Voltage	E, U		Volt	V		kV, mV, öV			
Resistance	R	R = U/I	Ohm	Ω		MΩ,kΩ,mΩ			1 Ω = 1V / 1A
Impedance	Z	Z = U/I	Ohm	|		MΩ,kΩ,mΩ			
Power (DC)	P	P = U.I	Watt	W		MW,kW,mW			1 W = 1V. 1A
Power (AC)									
Single phase active	P	P=U.I.cos	Watt	W		MW,kW,mW			1 W = 1V. 1A
reactive	Q	Q=U.I.sinφ	VAreactive	var		kvar			cos φ = P/S = P/√(P^2+Q^2)
apparent	S	S = U.I	Volt-ampere			kVA, MVA			$S^2 = P^2 + Q^2$
Three-phase active	P	P=√3.U.I.cosφ	Watt	W		MW,kW,mW			
reactive	Q	Q=√3.U.I.sinφ	VAreactive	var		kvar			
apparent	S	S= √3.U.I	Volt-ampere	VA		kVA, MVA			
Energy Consumption Active									
Single phase	Wa	Wa= U.I.t.cosφ	Joule	J		kWh			1 kWh = 3 600 000 J
Three-phase	Wa	Wa= √3.U.I.t.cosφ	Joule	J		kWh			1 kWh = 3 600 000 J
Energy Consumption Reactive									
Single phase	Wr	Wr= U.I.t.sinφ				kvarh			cos φ = Wa/√(Wa^2+Wr^2)
Three-phase	Wr	Wr= √3.U.I.t.sinφ				kvarh			
Resistance conductors	R	R = ρ.L/S	Ohm	Ω	ρ in Ω mm^2/m	L in m	S in mm^2		ρ_{Cu} = 0,0178 Ω.mm^2/m
Efficiency	h	η = Pn/Pt							Pn = useful power Pt = added power
Motor slip	s	s = (n_S-n_r).100/n_S	percent	%					n_S = f.60/p
Power mec	Pn(Pmec)	Pn=2π x C_M.n/60							Pt = Pn/η

Flex-o-Box Junior

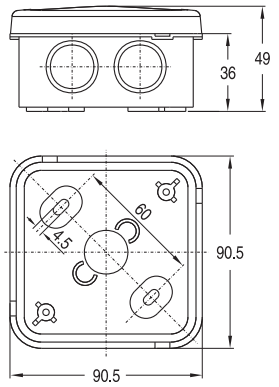

Flex-o-Box JB[6]

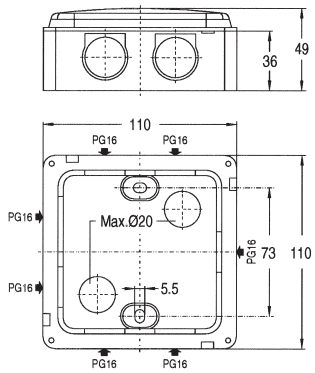

Series 55

Series 55100

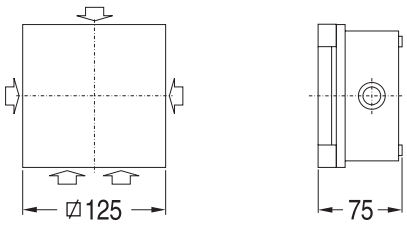

Series 55300

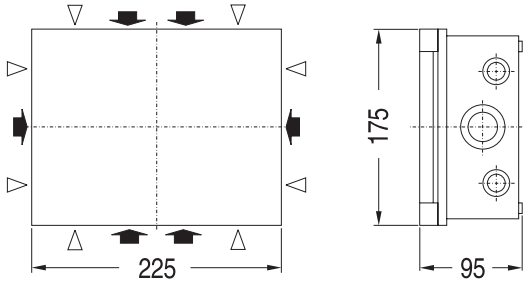

Series 55200

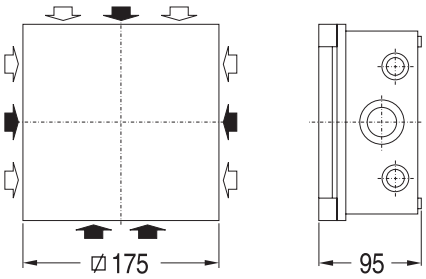

PG 21
PG 16/21
PG 21/29

Type A

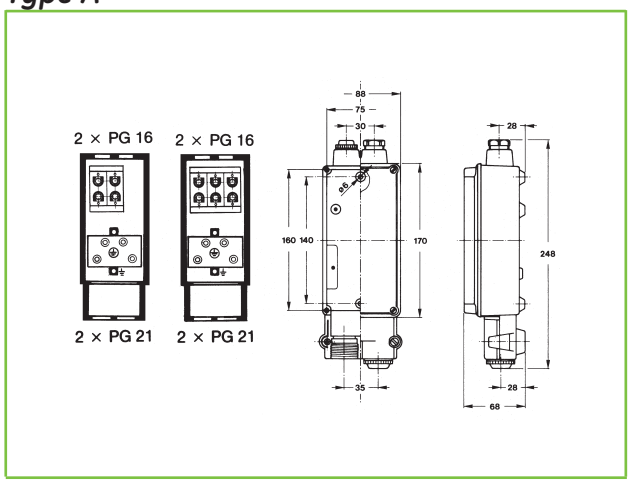

Type B

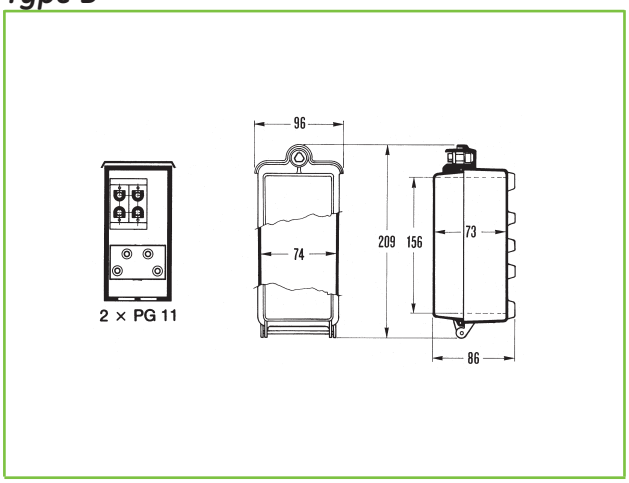

Type D

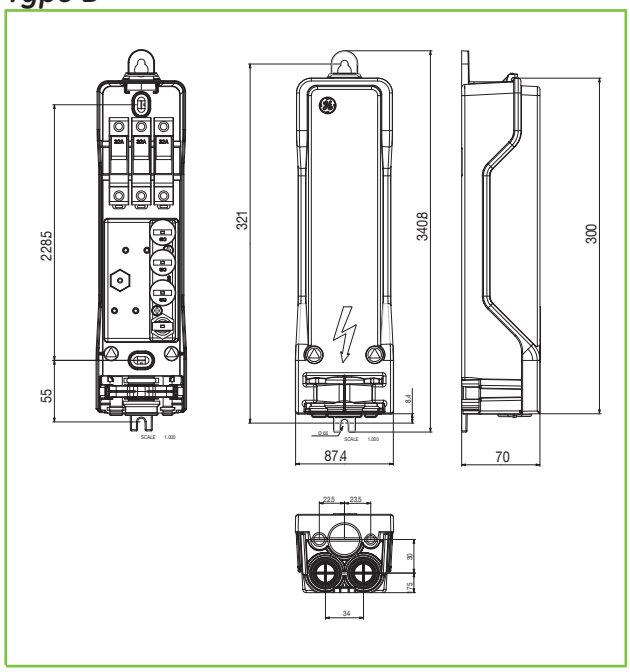

Type E

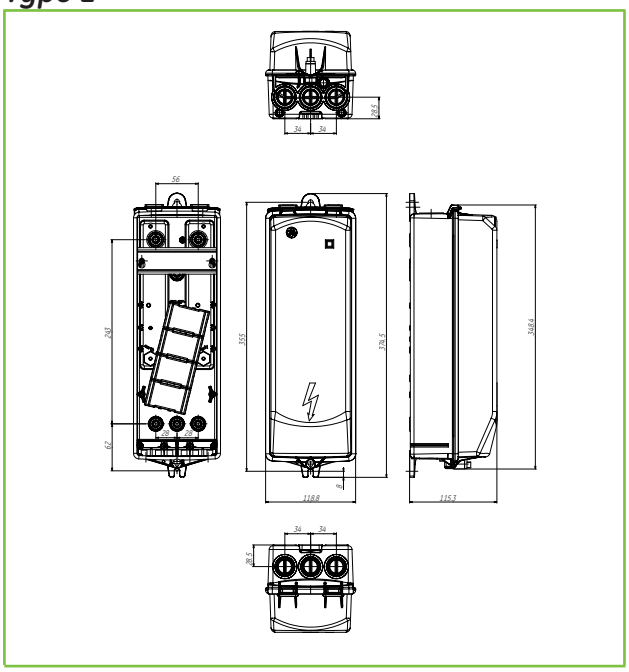

MB11 - MB44

Polystyrene/Polycarbonate	Polycarbonate (*)		
MB11 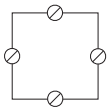	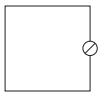	**Metric knockouts** ⊘ = M16/20	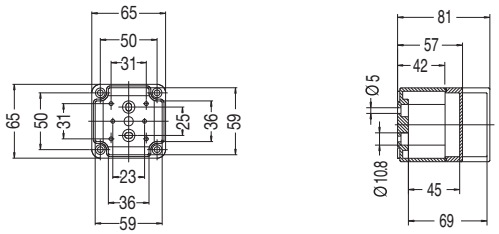
MB21 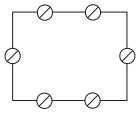		**Metric knockouts** ⊘ = M16/20	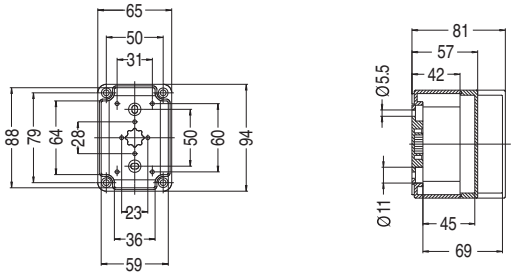
MB22 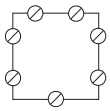	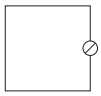	**Metric knockouts** ⊘ = M16/20	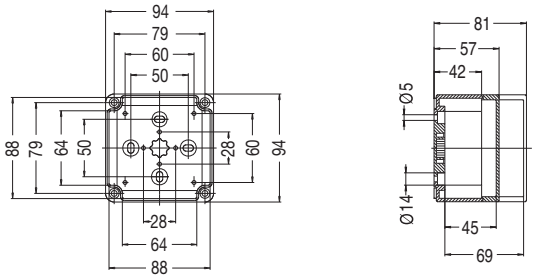
MB33 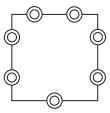	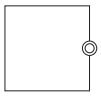	**Metric knockouts** ◎ = M20/25	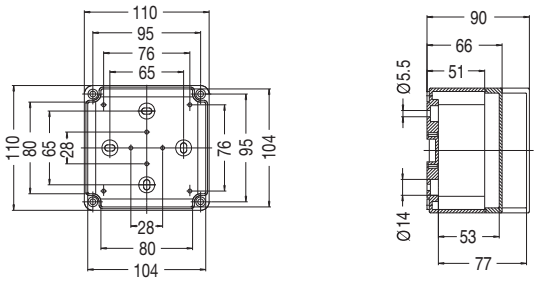
MB42 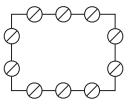		**Metric knockouts** ⊘ = M16/20	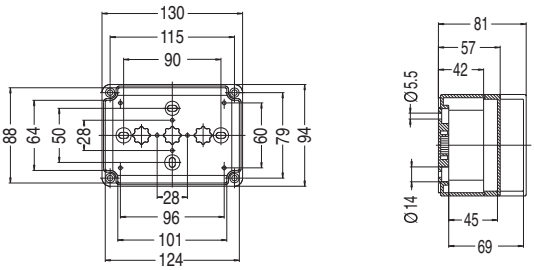
MB44 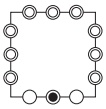		**Metric knockouts** ○ = M20 ◎ = M20/25 ◉ = M25/32	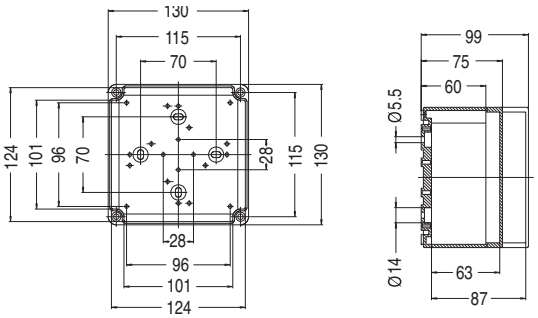

(*) Smooth = one metric knock-out on short side for power supply cord

MB52 - MB87

Polystyrene/Polycarbonate	Polycarbonate (*)		
MB52 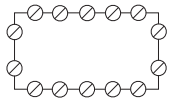		**Metric knockouts** ⊘ = M16/20	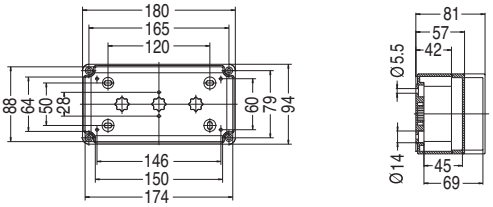
MB53 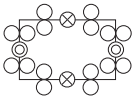		**Metric knockouts** ○ = M20 ◎ = M20/25 ◉ = M25/32 ⊗ = M32/40	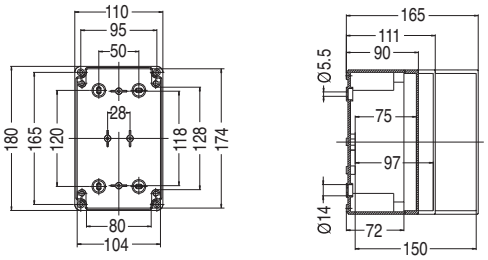
MB65 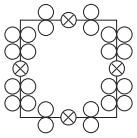	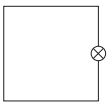	**Metric knockouts** ○ = M20 ⊗ = M32/40	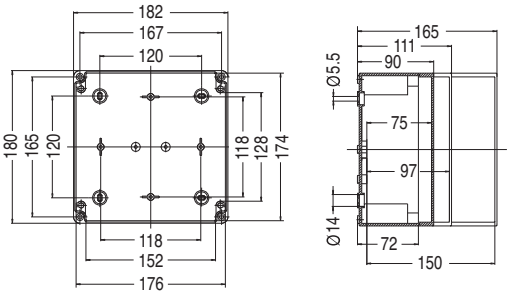
MB75 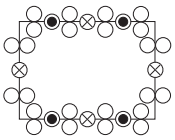		**Metric knockouts** ○ = M20 ◉ = M25/32 ⊗ = M32/40	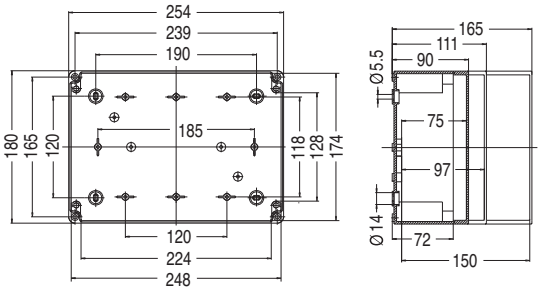
MB87 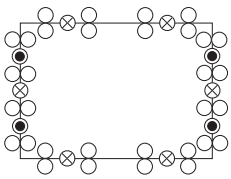		**Metric knockouts** ○ = M20 ◉ = M25/32 ⊗ = M32/40	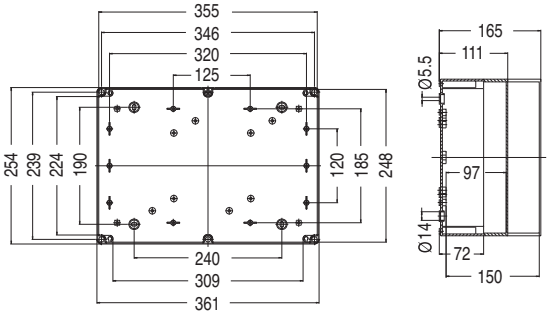

(*) Smooth = one metric knock-out on short side for power supply cord

Boxes

MBX 32

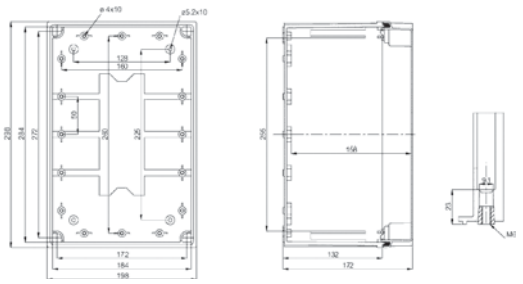

MBX 33

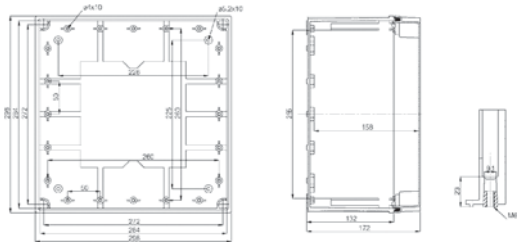

MBX 431 & 432

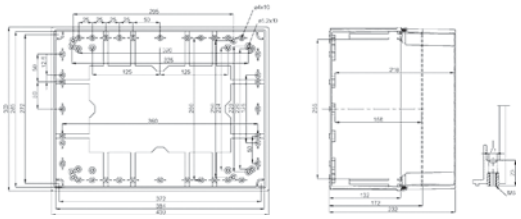

MBX 44

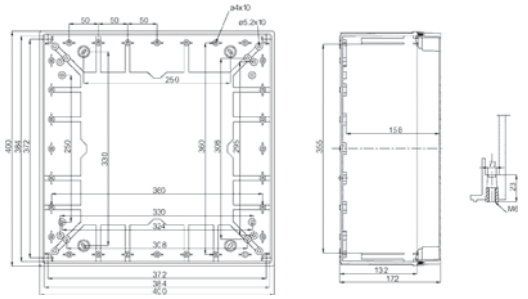

MBX 63

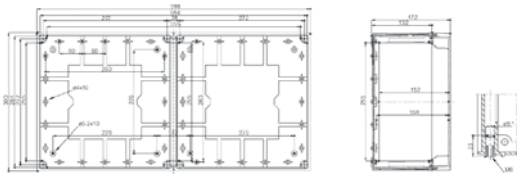

MBX 641 & 642

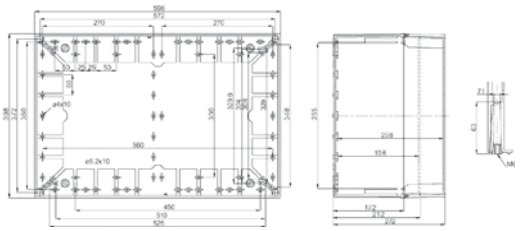

Cabinets

MC 32

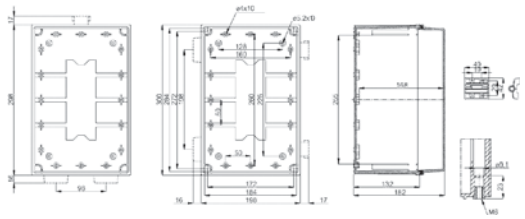

MC 33

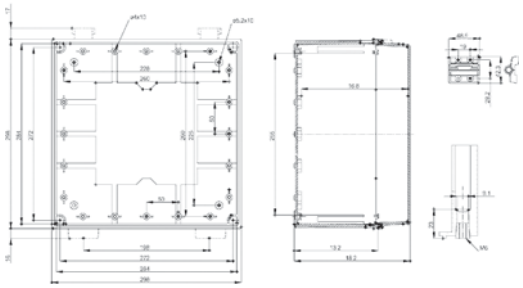

MC 43

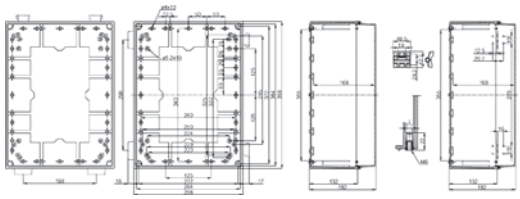

MC 54

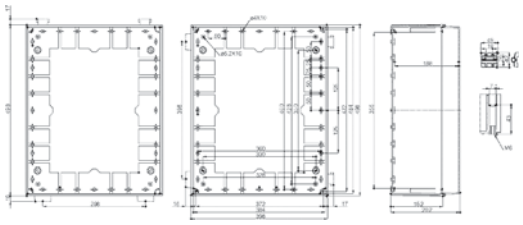

MC 64

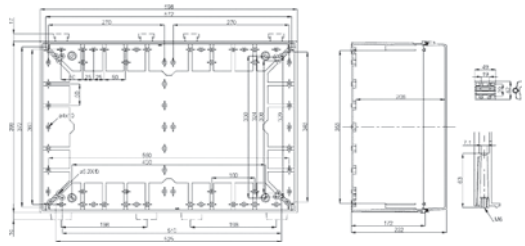

Bases

● = insert standard delivered in APO boxes (base + cover)
◯ = with insert M4 or M6

APO 1

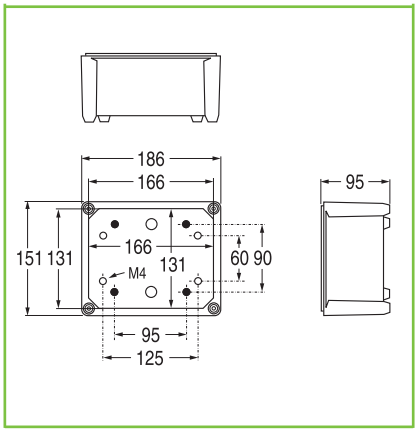

APO 71

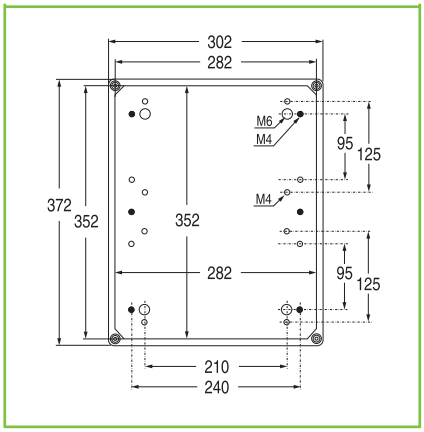

APO 51

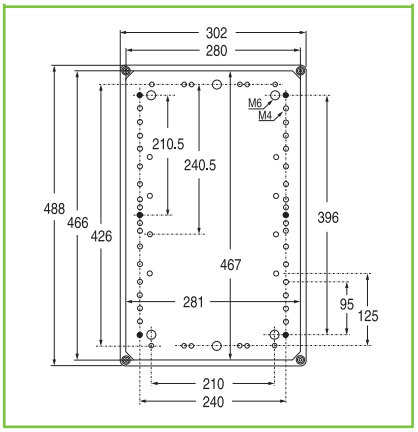

APO 31

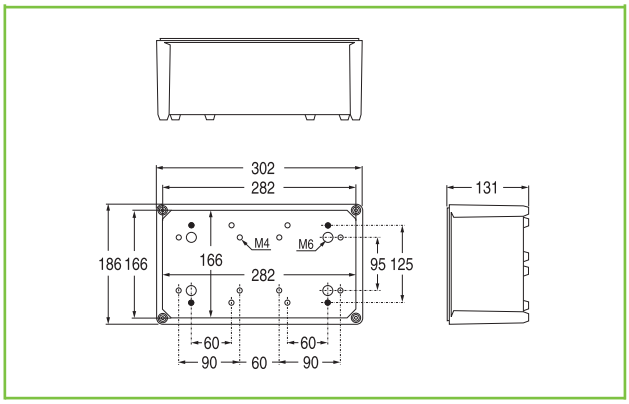

APO 81

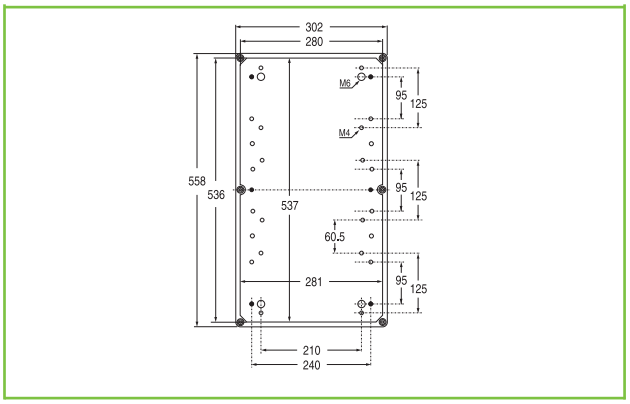

APO 41

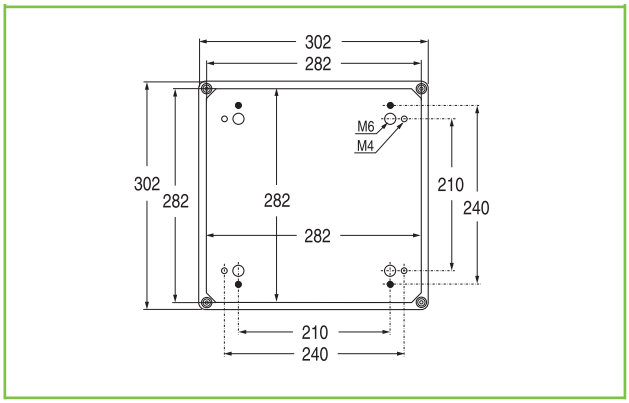

APO 61

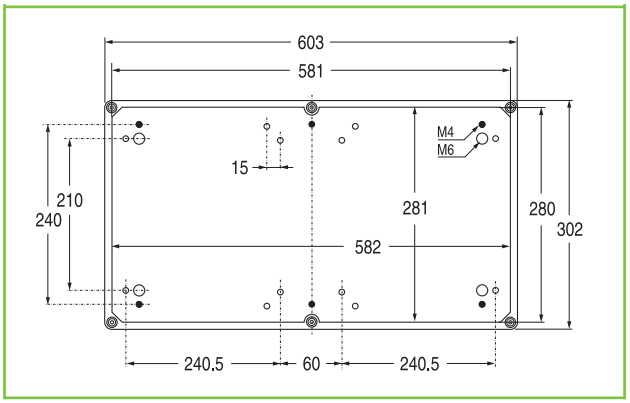

APO 11

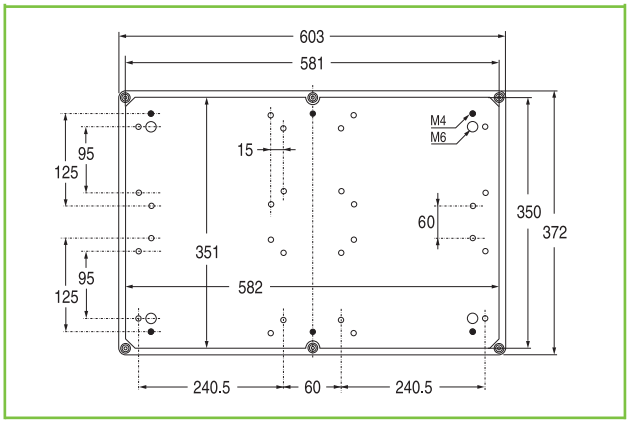

APO 12

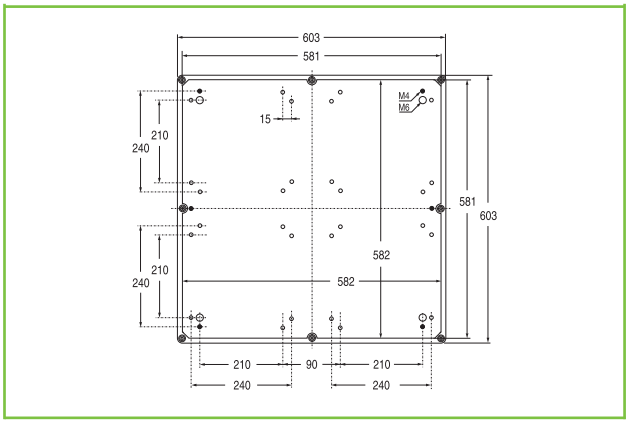

Boxes

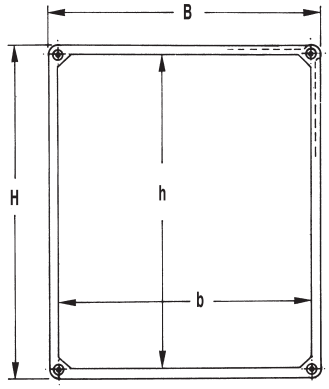

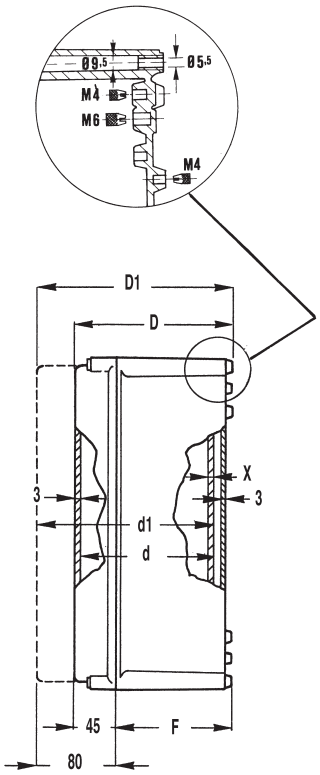

Wall mounting

Direct to the wall

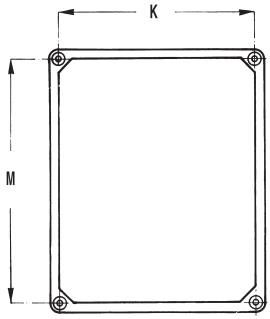

With stainless steel mounting brackets

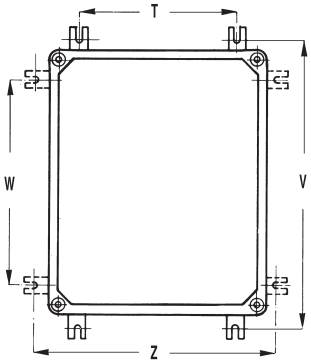

With polyamide mounting brackets

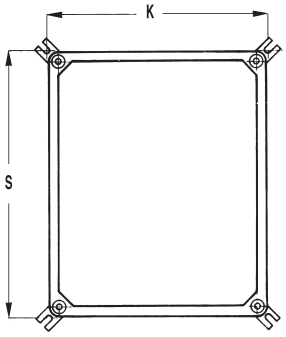

Transparant hinged cover

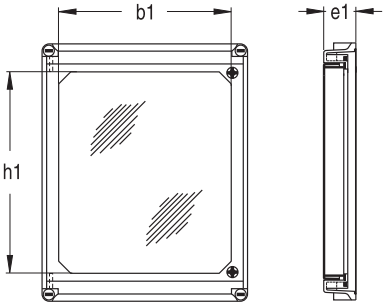

APO 11
Hinged cover with side flange

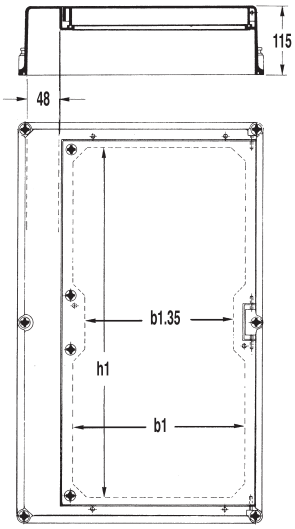

Dimensions																				
H	B	D	D1	h	b	d	d1	F	h1	b1	e1	Type	K	M	R	S	T	V	W	Z
186	151	140	-	166	131	118-X	-	95	-	-	-	**APO 1**	131	166	155	190	-	-	-	-
302	186	175	-	282	166	150-X	-	130	110	260	45	**APO 31**	282	166	190	306	125	312	241	197
302	302	175	-	282	282	150-X	-	130	225	260	45	**APO 41**	282	282	306	306	241	313	241	313
372	302	175	-	352	282	150-X	-	130	295	260	45	**APO 71**	282	352	376	306	241	383	311	313
488	302	175	210	467	281	150-X	185-X	130	410	260	45	**APO 51**	280	466	490	304	241	499	427	313
558	302	175	210	537	281	150-X	185-X	130	-	-	-	**APO 81**	280	536	561	305	241	569	497	313
603	302	175	210	582	281	150-X	185-X	130	525	260	45	**APO 61**	280	581	606	305	241	614	542	313
603	372	175	210	582	351	150-X	185-X	130	525	260	115	**APO 11**	350	581	606	374	311	614	542	383
603	603	175	210	582	582	150-X	185-X	130	-	-	-	**APO 12**	581	581	605	605	542	614	542	614

X = thickness of mounting plate

Cut-outs in side panels

Side 185

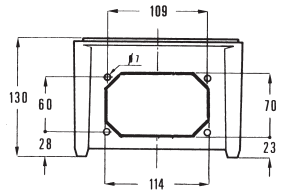

Side 300

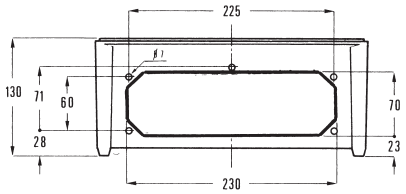

Side 370

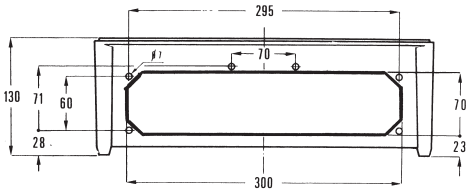

Side 485

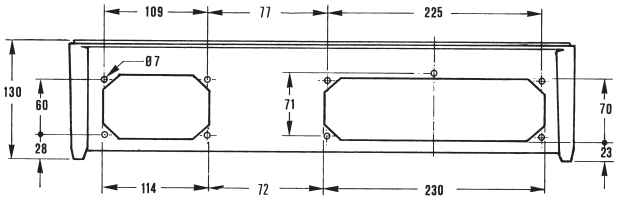

Side 555

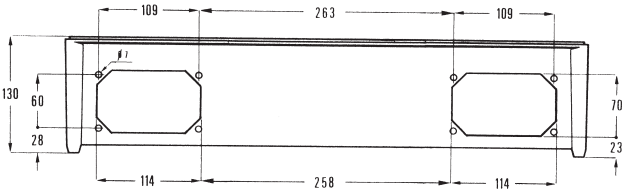

Side 600

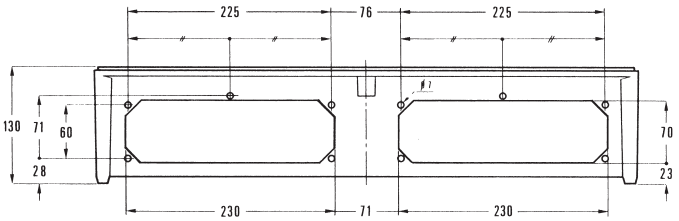

Cable-end boxes

APO 31

1 entry

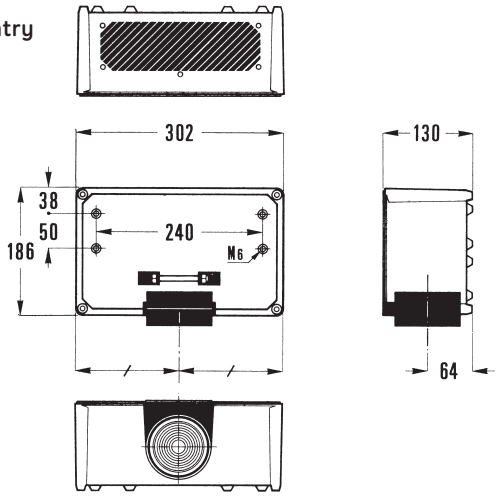

2 entries

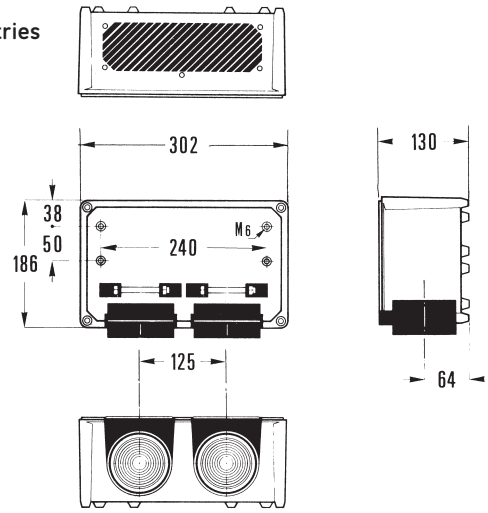

APO 41

1 entry

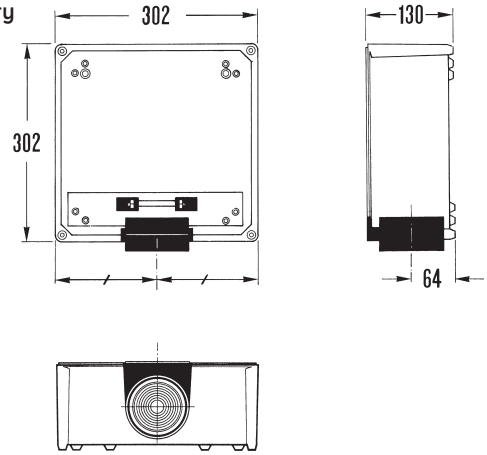

APO 71

3 entries

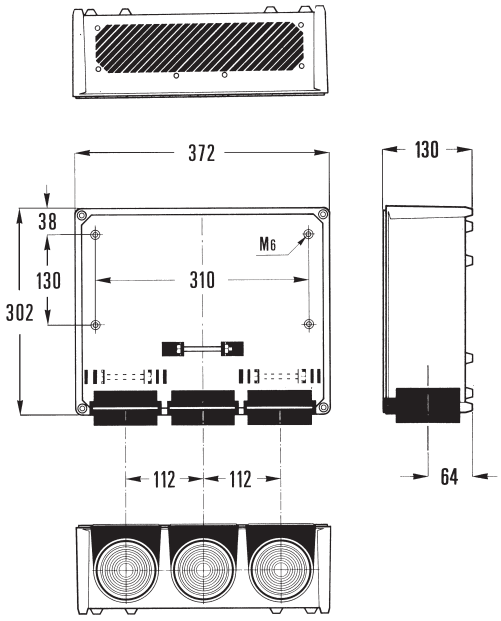

Cabinets

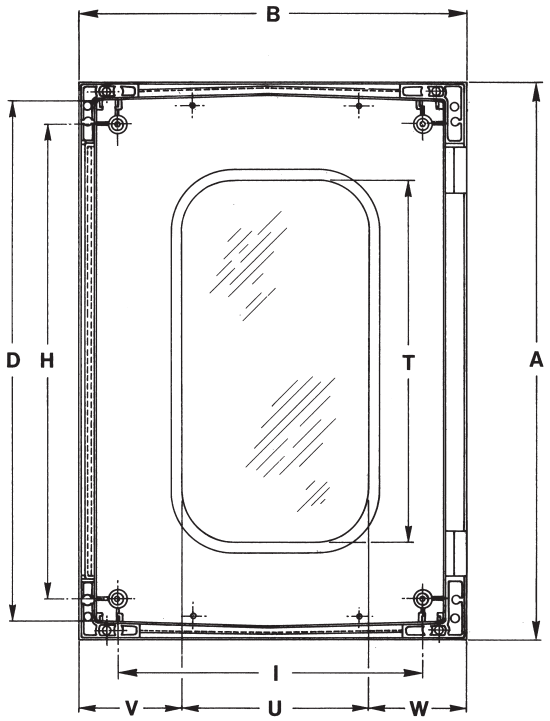

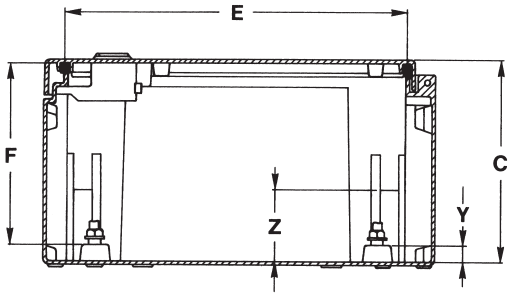

Dimensions							
ARIA	32	43	54	64	75	86	108
A	315	415	515	615	735	835	1035
B	215	315	415	415	535	635	835
C	170	170	230	230	270	300	300
D	275	375	475	575	675	775	975
E	170	270	370	370	470	570	770
F	148	148	208	208	248	278	277
H	225	325	425	525	625	725	925
I	125	225	325	325	425	525	725
K	275	375	475	575	675	775	975
L	70	150	200	200	300	400	600
M	295	395	495	595	-	-	-
N	155	255	355	355	-	-	-
O	362	462	562	662	782	882	1082
P	162	262	362	362	482	582	782
Q	262	362	462	562	682	782	982
R	262	362	462	462	582	682	882
T	-	280	380	480	580	680	880
U	-	130	230	230	330	430	630
V	-	70	70	70	80	80	80
W	-	115	115	115	125	125	125
X	6	6	6	6	8	8	8
Y	14	14	15,5	15,5	15,5	15,5	15,5
Z	28	25	88	88	118	148	148

Wall mounting

Direct to the wall

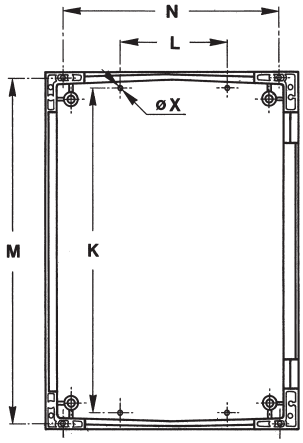

By fixing lugs in polyamide

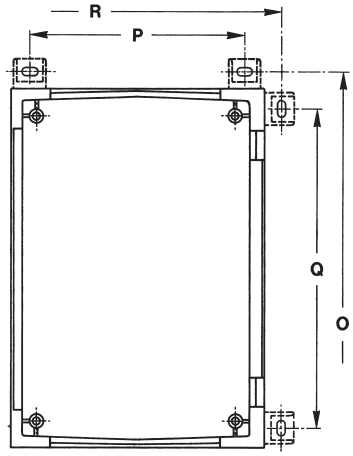

By fixing lugs in stainless steel

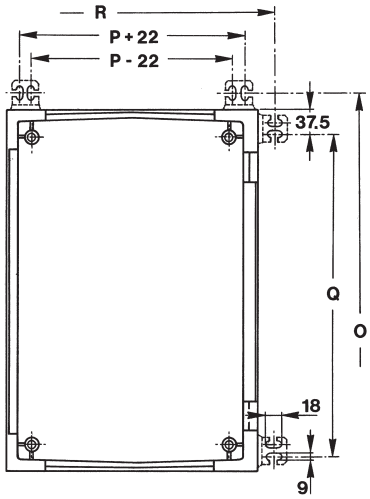

Mounting plates

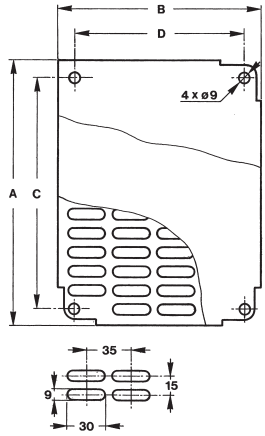

Dimensions				
ARIA	A	B	C	D
32	250	150	225	125
43	350	250	325	225
54	450	350	425	325
64	550	350	525	325
75	650	450	625	425
86	750	550	725	525
108	950	750	925	725

Cover plates

Plain and with openings for DIN-rail equipment

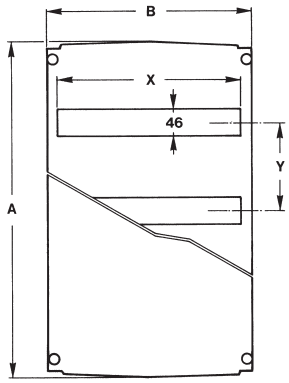

Dimensions					
ARIA		A	B	X	Y
32	2 rows	279	162	108	125
43	2 rows	379	262	216	150
54	3 rows	479	362	324	150
64	3 rows	579	362	324	150
75	4 rows	690	462	396	150
86	4 rows	790	562	2 x 216	150
108	5 rows	990	762	2 x 324	150

Cover plates with cut-out for individual modular cover plates

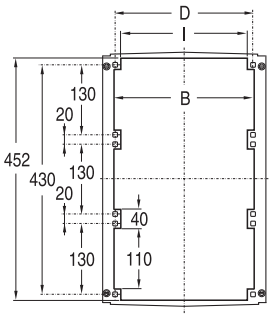

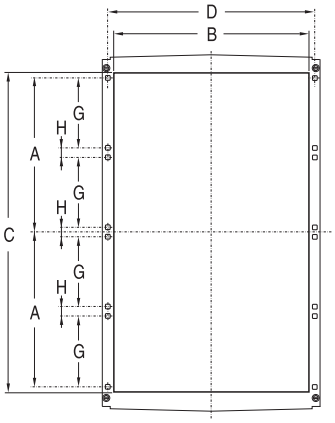

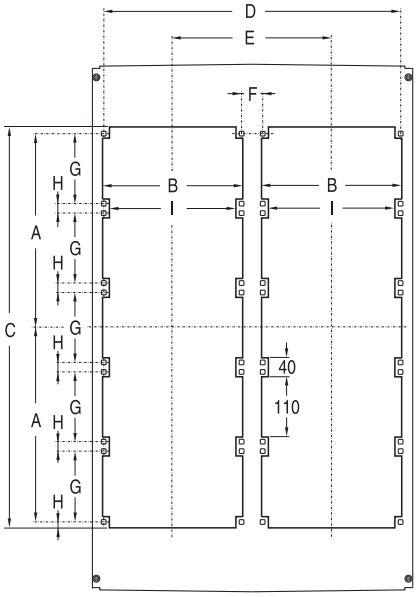

Dimensions										
Type	A	B	C	D	E	F	G	H	I	Mod.
ARIA 43	140	216	302	236	-	-	130	20	-	24
ARIA 54	-	308	-	303	-	-	-	-	283	51
ARIA 64	-	326	-	336	-	-	-	-	316	54
ARIA 75	290	400	602	428	-	-	130	20	-	88
ARIA 86	290	216	602	524	288	52	130	20	-	96
ARIA 108	365	326	752	732	396	60	130	20	316	180

Individual modular cover plate

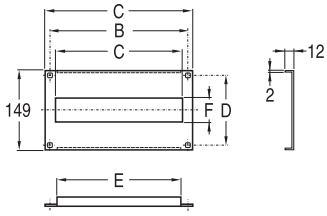

Dimensions						
Ref. No.	A	B	C	D	E	F
831796	255	236	216	130	210	46
831797	255	236	0	130	210	0
831798	322	303	306	130	280	46
831799	322	303	0	130	280	0
831800	355	336	324	130	312	46
831801	355	336	0	130	312	0
831802	455	428	396	130	396	46
831803	455	428	0	130	396	0

Enclosures

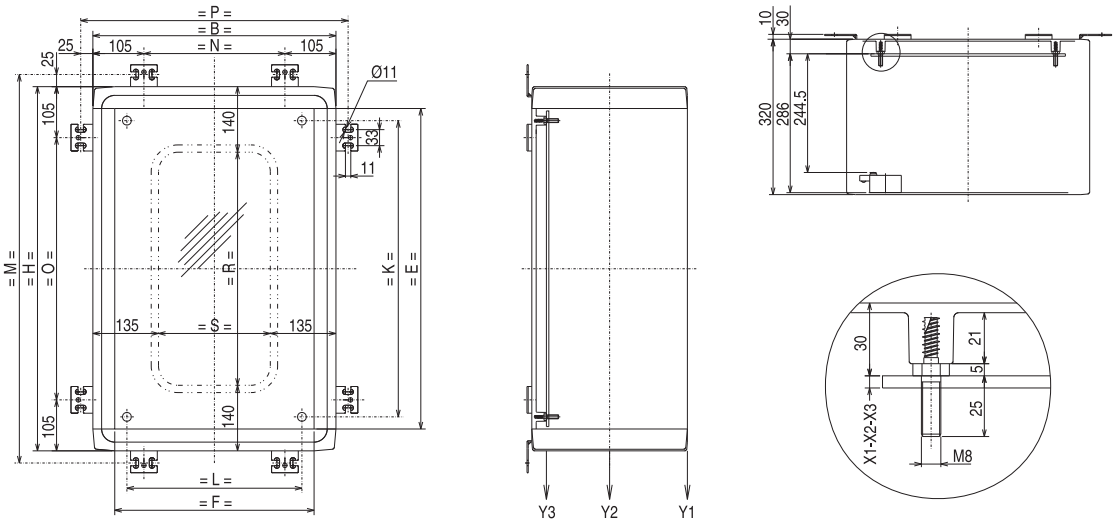

Usable mounting space on the doors

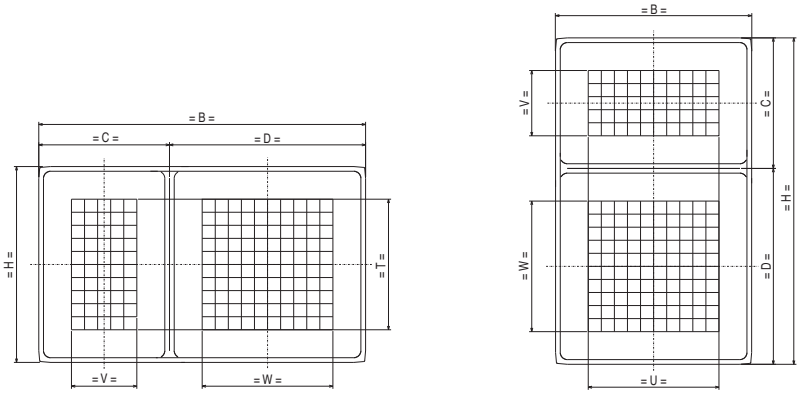

Dimensions																								
Type	H	B	C	D	E	F	K	L	M	N	O	P	R	S	T	U	V	W	X1	X2	X3	Y1	Y2	Y3
220	500	500			410	410	360	360	550	290	290	550	220	230	250	250			5	2	-	8	80	110
230	500	750			410	660	360	610	550	540	290	800	220	480	250	500			5	2	-	8	80	110
320	750	500			660	410	610	360	800	290	540	550	470	230	500	250			5	2	-	8	80	110
330	750	750			660	660	610	610	800	540	540	800	470	480	500	500			5	2	-	8	80	110
340	750	1000			660	910	610	860	800	790	540	1050	470	730	500	750			5	2	-	6	80	110
352	750	1250	500	750	660		610	1110	800	1040	540	1300			500		250	500	5	2	10	5	80	110
420	1000	500			910	410	860	360	1050	290	790	550	720	230	750	250			5	2	-	8	80	110
430	1000	750			910	660	860	610	1050	540	790	800	720	480	750	500			5	2	-	8	80	110
440	1000	1000			910	910	860	860	1050	790	790	1050	720	730	750	750			5	2	10	6	80	110
442	1000	1000	500	500	910		860	860	1050	790	790	1050			750		250	250	5	2	10	6	80	110
452	1000	1250	500	750	910		860	1110	1050	1040	790	1300			750		250	500	5	2	10	5	80	110
530	1250	750			1160	660	1110	610	1300	540	1040	800	970	480	1000	500			5	2	10	8	80	110
542	1250	1000	500	750		910	1110	860	1300	790	1040	1050				750	250	500	5	2	10	6	80	110
546	1250	1000	500	750		910	1110	860	1300	790	1040	1050				750	250	500	5	2	10	6	80	110
	Enclosure external dimensions		Door dimensions		Enclosure let-through		Centres of the mounting plate		Centres for wall mounting				Window surface		Usable mounting space on the doors				Thickness of the mounting plate X1 = pertinax 5 mm X2 = metal perforated 2 mm X3 = pertinax 10 mm				Admissible charge in kg	

Inner door

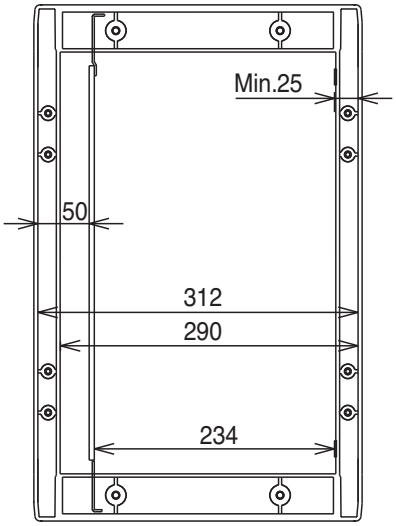

Adjustable mounting plate

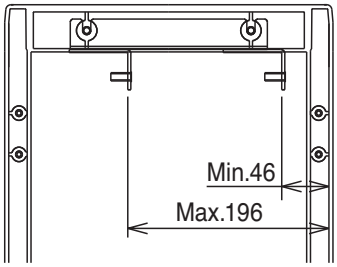

Adjustable mounting frame in steps of 12.5 mm

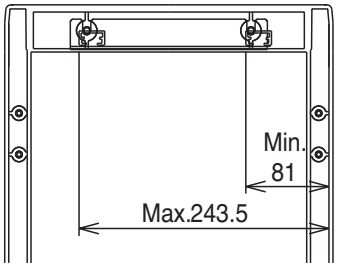

Continuously adjustable mounting frame

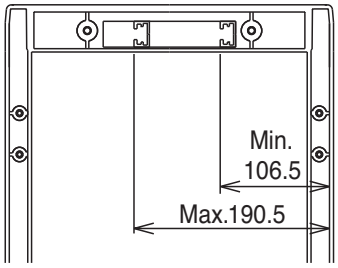

Bases

VMS 32

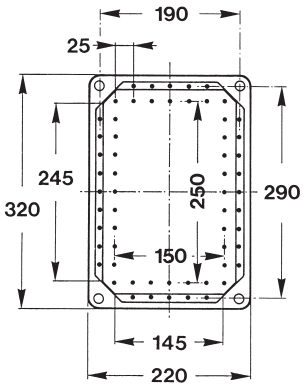

VMS 33

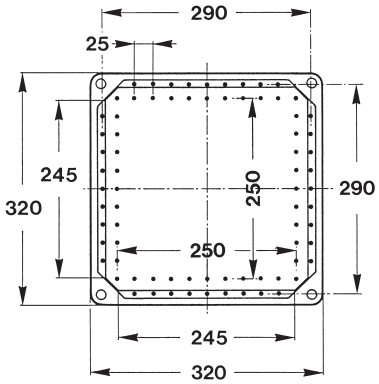

VMS 43

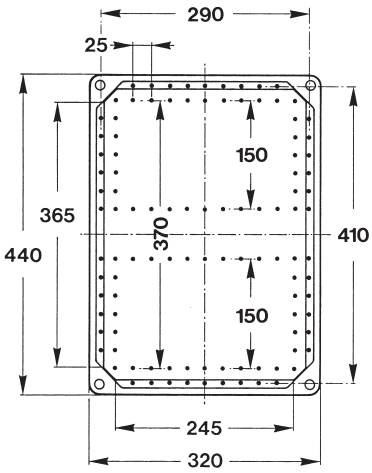

VMS 63

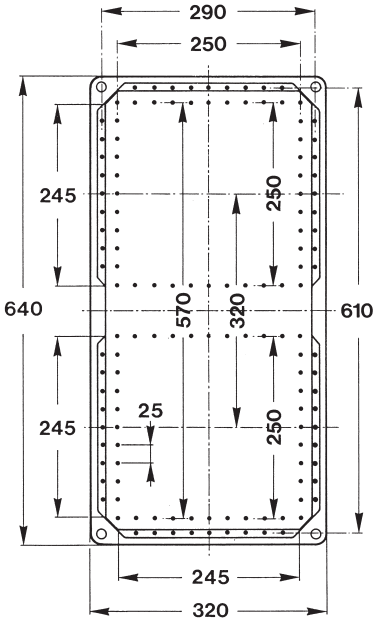

VMS 64

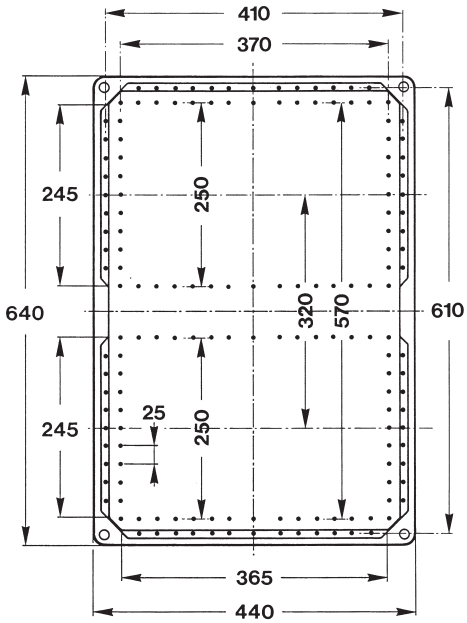

Bases

Openings in the base side walls

Side 220

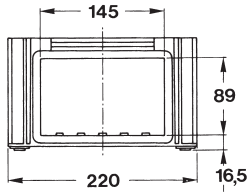

Side 320

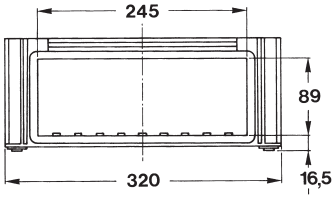

Side 440

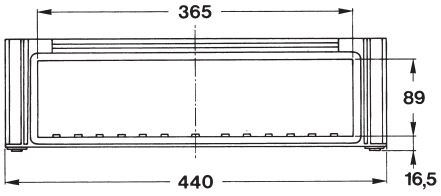

Side 640

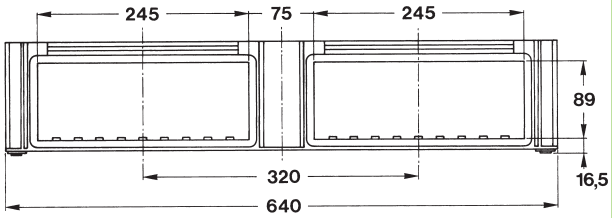

Built-in heights

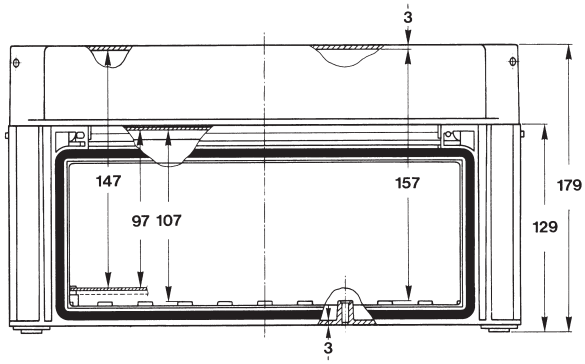

Pivoting covers

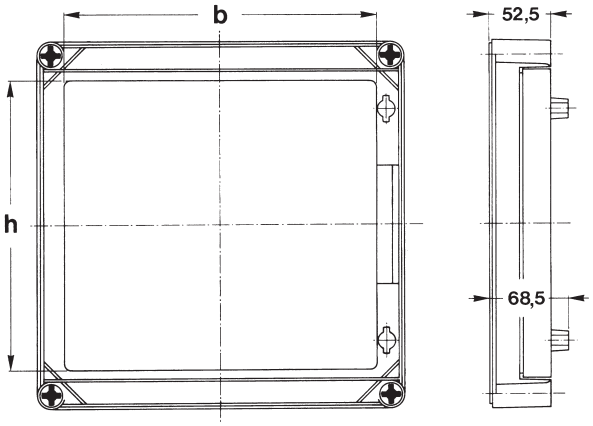

Type	Dimensions	b	h
VMS 33	320 x 320	260	241
VMS 43	440 x 320	260	361

Cable end plates and universal cable stress releases

Side 320

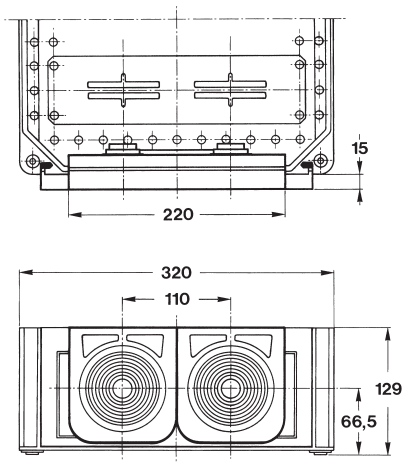

Side 440

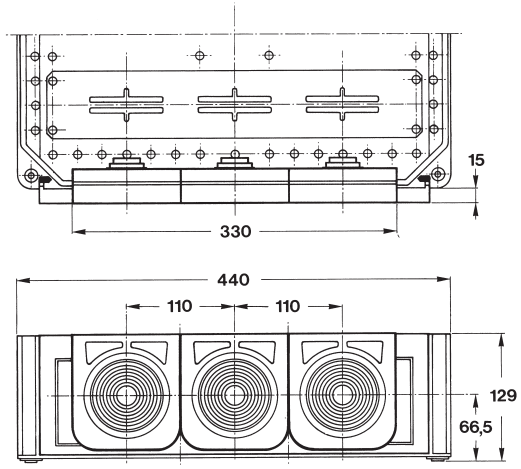

Side view

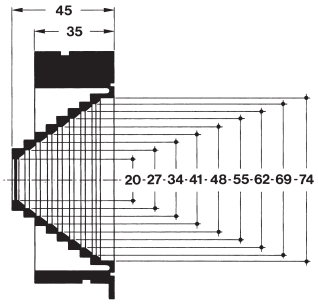

Mounting brackets

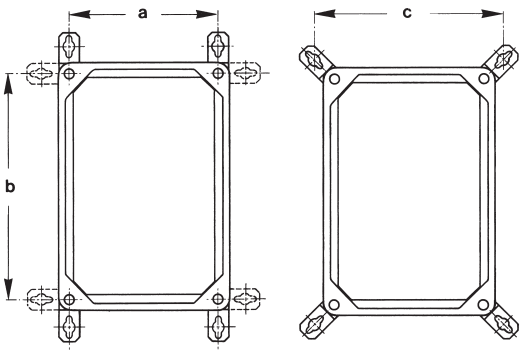

Type	Dimensions	a	b	c
VMS 32	320 x 220	193	293	254
VMS 33	320 x 320	293	293	354
VMS 43	440 x 320	293	413	354
VMS 63	640 x 320	293	613	354
VMS 64	640 x 440	413	613	474

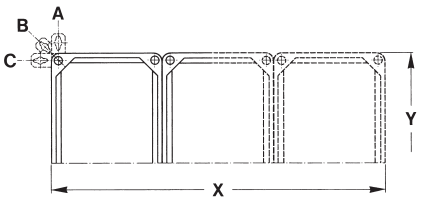

	Centre dimensions	
A	X - 27	Y + 40
B	X + 34	Y + 34
C	X + 40	Y - 27

Busbar supports

125A-250A - horizontal • 250A - parallel

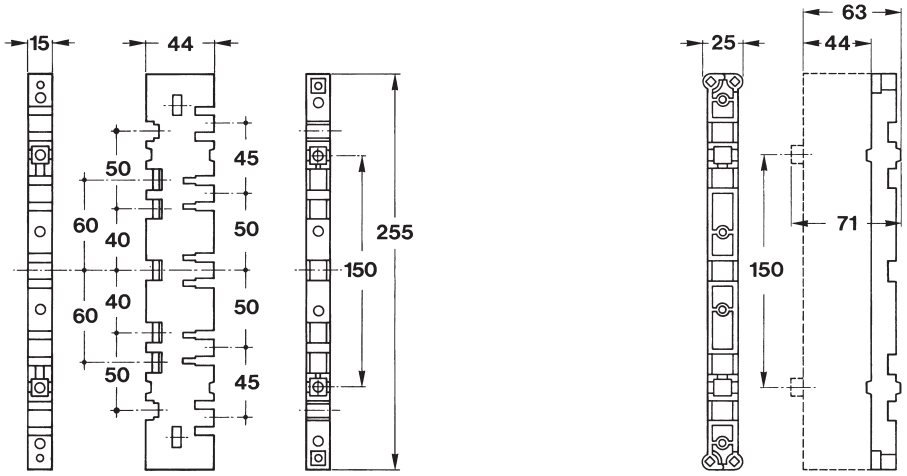

125A-250A - horizontal • 400A - parallel

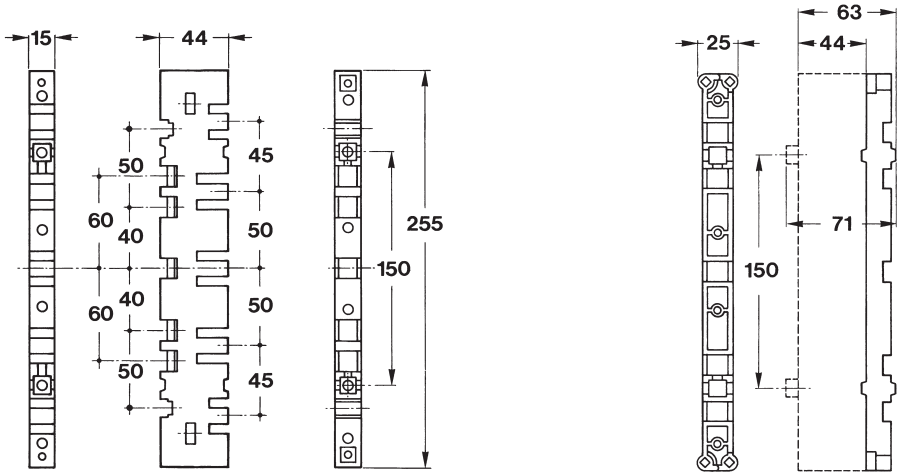

630A-1250A - parallel

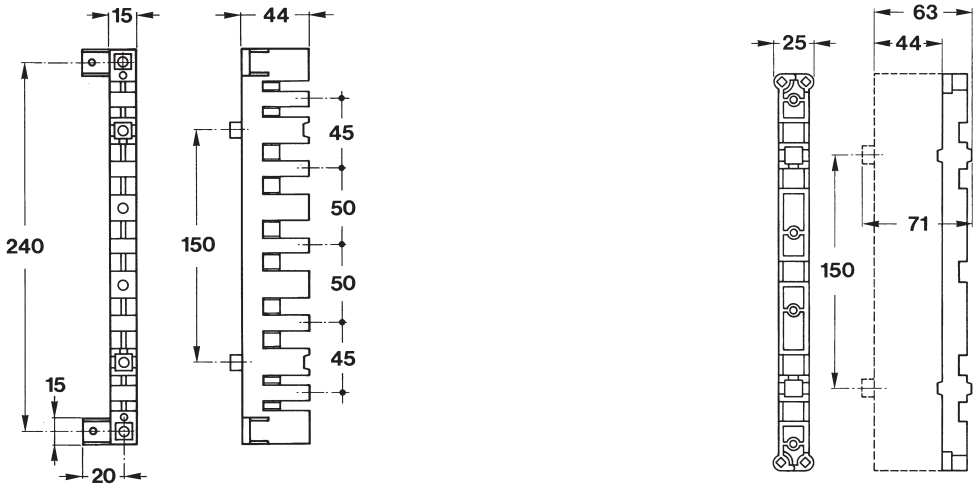

Surface mounting

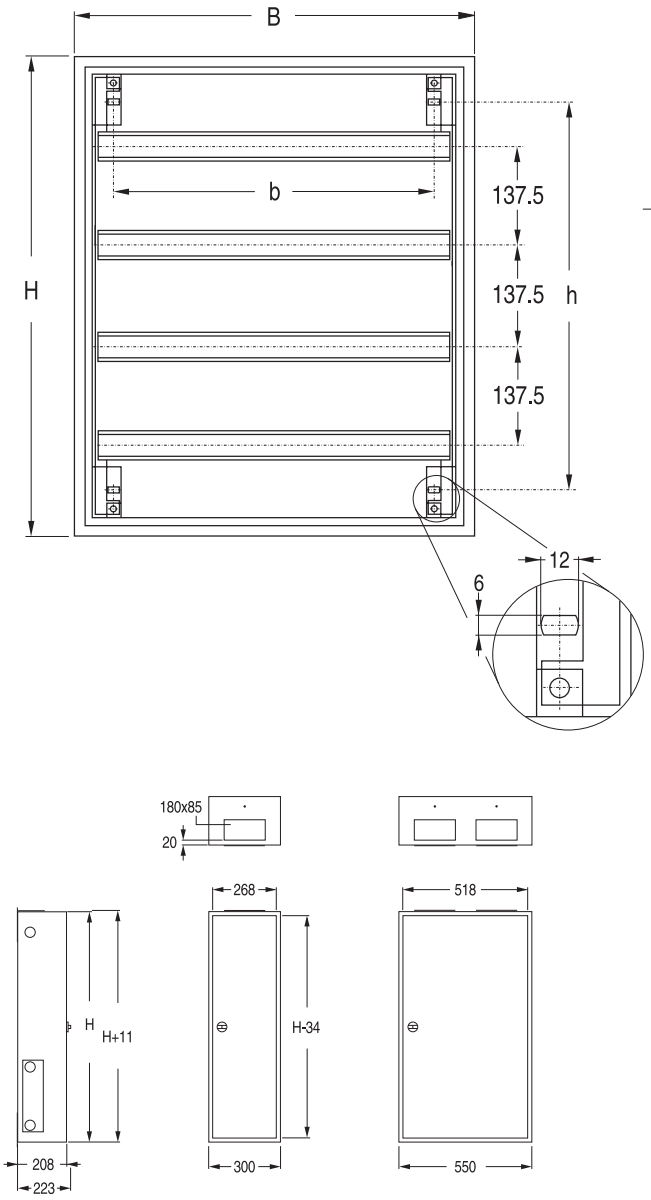

Dimensions				
Type	B	b	H	ha
4 rows - 48 mod.	300	191	650	401
5 rows - 60 mod.	300	191	800	551
4 rows - 96 mod.	550	441	650	401
5 rows - 120 mod.	550	441	800	551
6 rows - 144 mod.	550	441	950	701

4 pole terminals

63A

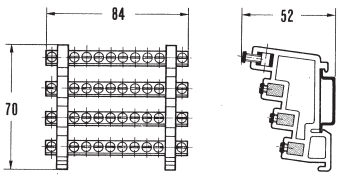

160A

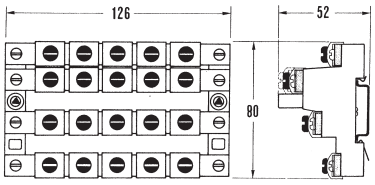

160A - with protective cover

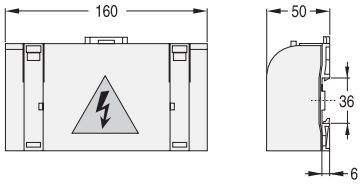

Enclosures

Wall mounting

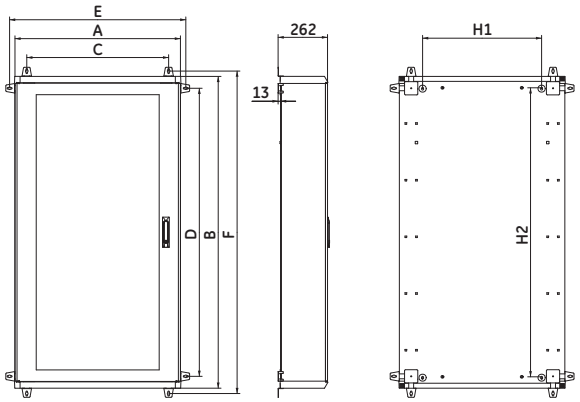

Floor standing

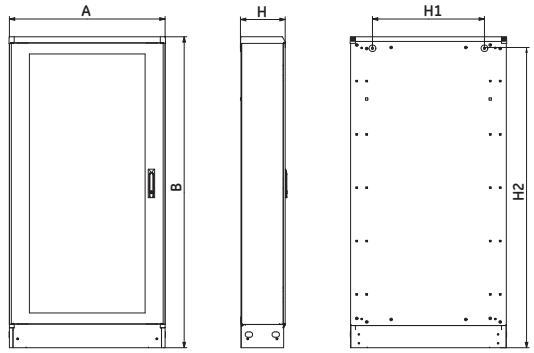

Cross-section

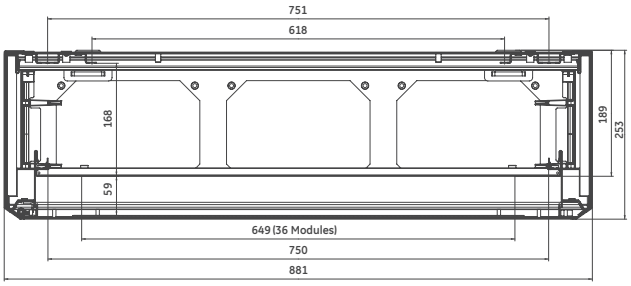

Width 12 modules

	A	B	C	D	E	F	H	H1	H2
4 rows	364	750	239	625	421	807	252	120	630
5 rows	364	900	239	775	421	957	252	120	780
6 rows	364	1050	239	925	421	1107	252	120	930
7 rows	364	1200	239	1075	421	1257	252	120	1080
8 rows	364	1350	239	1225	421	1407	252	120	1230
9 rows + base	364	1600	239	-	-	-	252	120	1380
10 rows + base	364	1750	239	-	-	-	252	120	1530
12 rows + base	364	2050	239	-	-	-	252	120	1830

Width 24 modules

	A	B	C	D	E	F	H	H1	H2
3 rows	660	600	535	475	717	657	252	415	480
4 rows	660	750	535	625	717	807	252	415	630
5 rows	660	900	535	775	717	957	252	415	780
6 rows	660	1050	535	925	717	1107	252	415	930
7 rows	660	1200	535	1075	717	1257	252	415	1080
8 rows	660	1350	535	1225	717	1407	252	415	1230
9 rows + base	660	1600	535	-	-	-	252	415	1380
10 rows + base	660	1750	535	-	-	-	252	415	1530
12 rows + base	660	2050	535	-	-	-	252	415	1830

Width 36 modules

	A	B	C	D	E	F	H	H1	H2
5 rows	876	900	751	775	933	957	252	630	780
6 rows	876	1050	751	925	933	1107	252	630	930
7 rows	876	1200	751	1075	933	1257	252	630	1080
8 rows	876	1350	751	1225	933	1407	252	630	1230
9 rows + base	876	1600	751	-	-	-	252	630	1380
10 rows + base	876	1750	751	-	-	-	252	630	1530
12 rows + base	876	2050	751	-	-	-	252	630	1830

Enclosure dimensions

Width 400mm

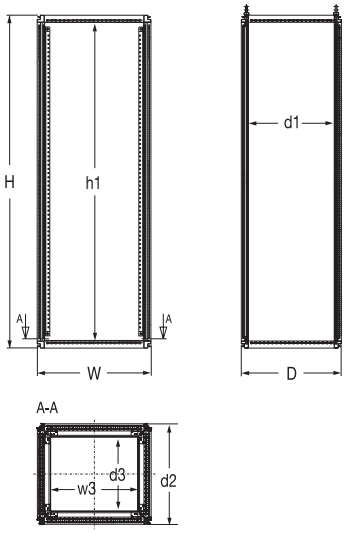

Dimensions (mm)							
H	W	D	d1	d2	d3	w3	h1
2000	400	500	412	505	340	240	1800
2000	400	700	612	705	540	240	1800

Width 650mm

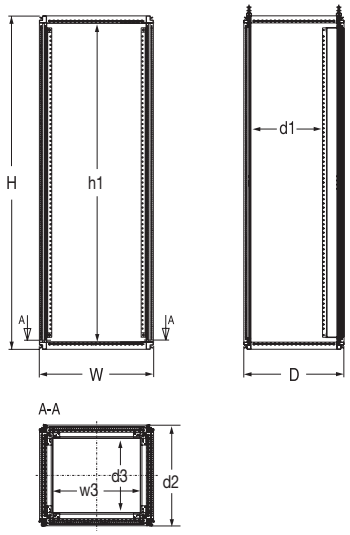

Dimensions (mm)							
H	W	D	d1	d2	d3	w3	h1
2000	650	500	326	505	340	490	1800
2000	650	700	526	705	540	490	1800

Width 900mm

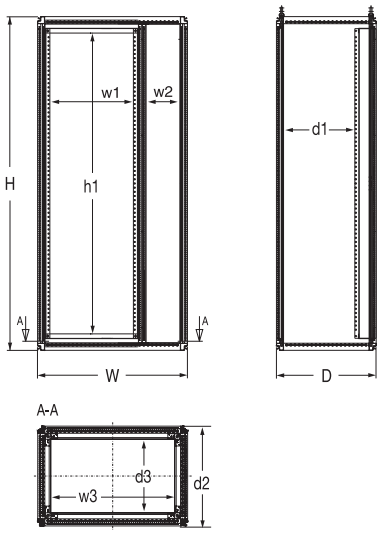

Dimensions (mm)									
H	W	D	d1	d2	d3	w1	w2	w3	h1
2000	900	500	326	505	340	500	207	740	1800
2000	900	700	526	705	540	500	207	740	1800

Dimensions between door and internal coverplate (top view)

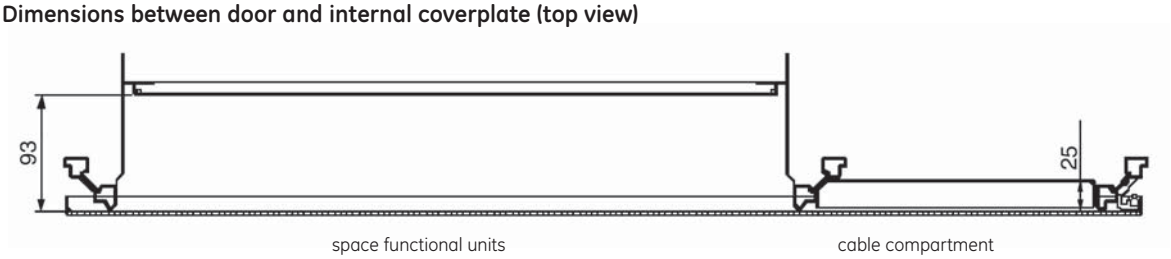

Notes

EH1 - Small pedestal

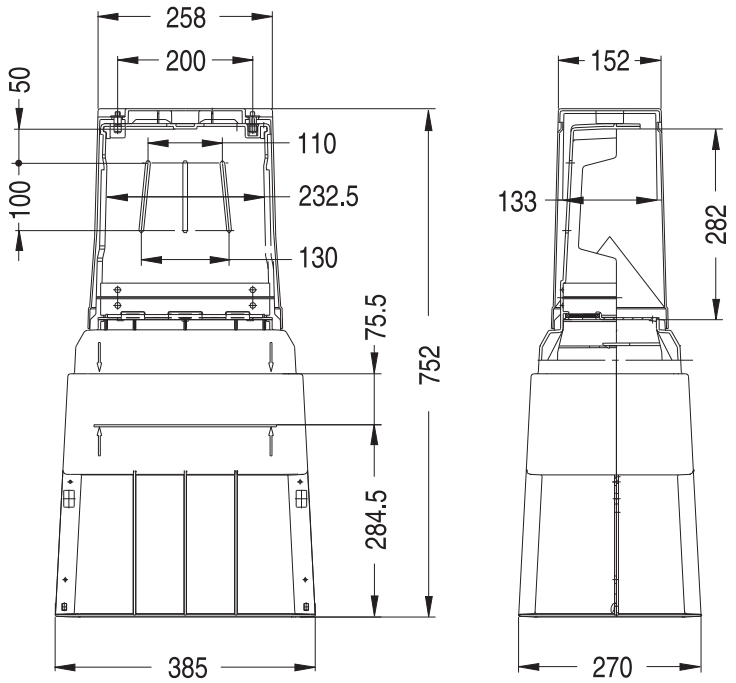

EH2 - Column cabinets

EH2-NA

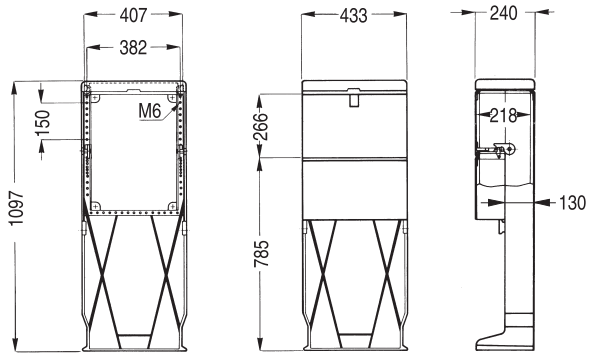

EH2-NB

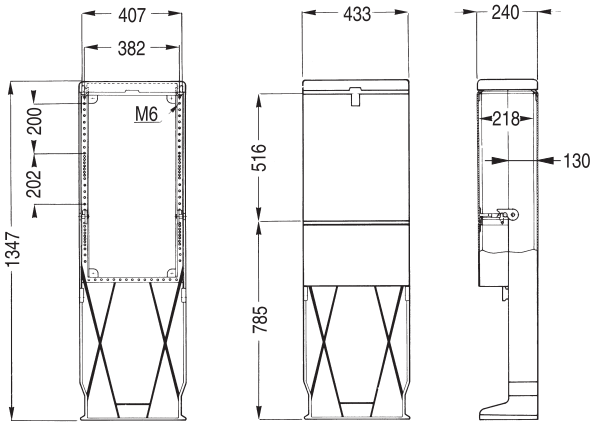

EH2-NC

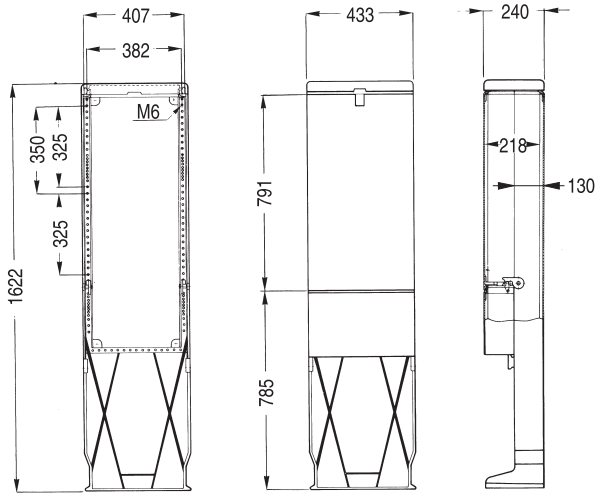

EH2-ND

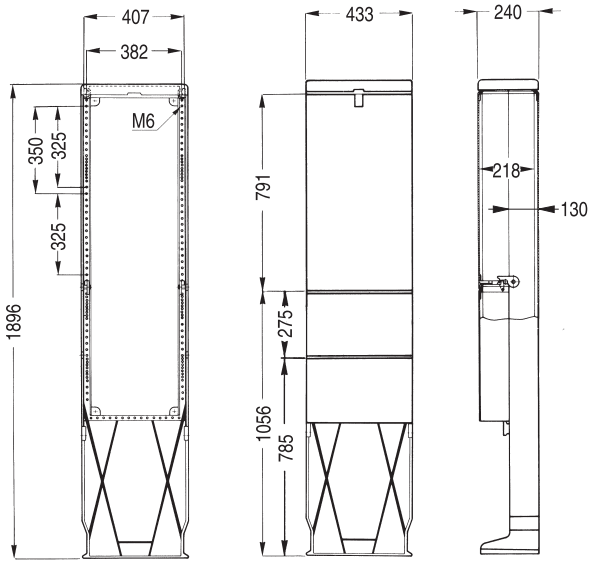

EH2 - Mounting plates

EH2-NA

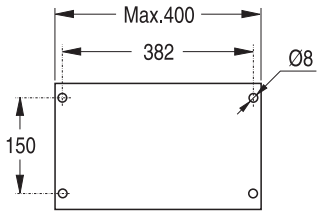

EH2-NB

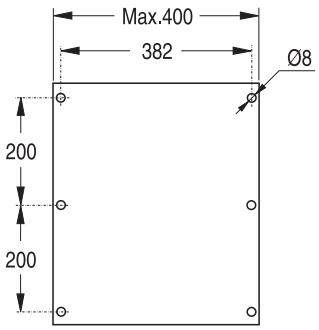

EH2-NC/ND

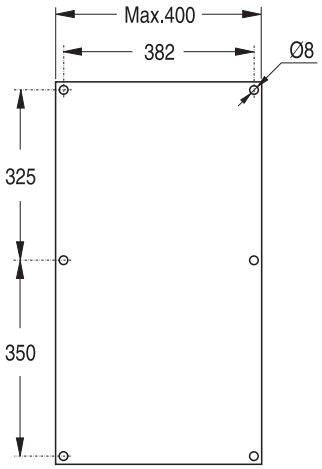

EH3 - 0

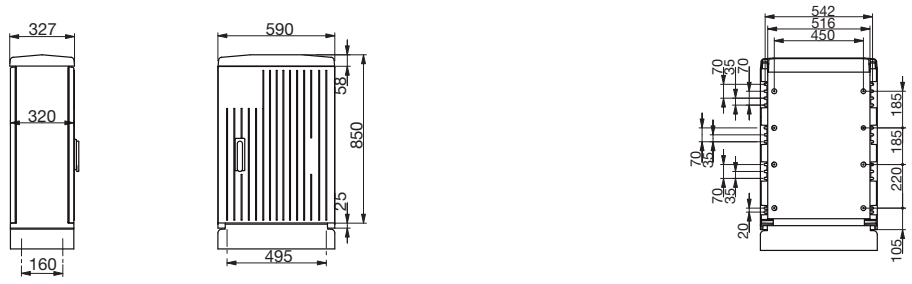

EH3 - 1

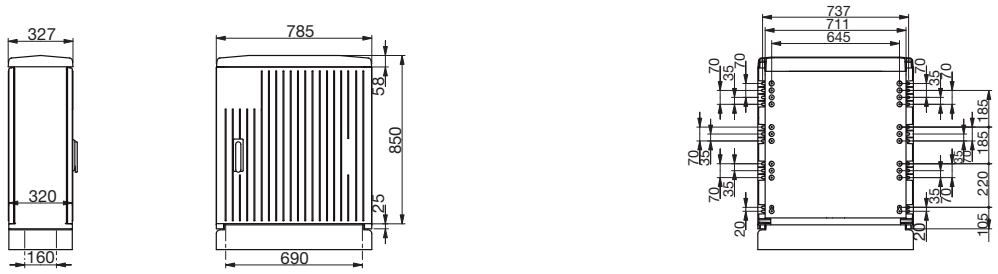

EH3 - 2

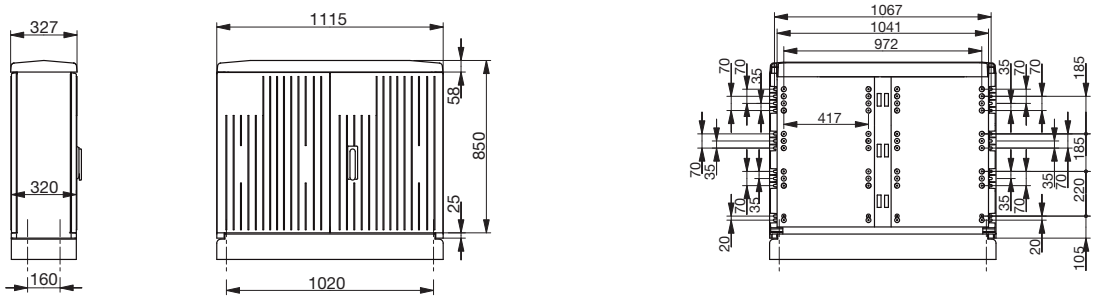

EH3 - 3

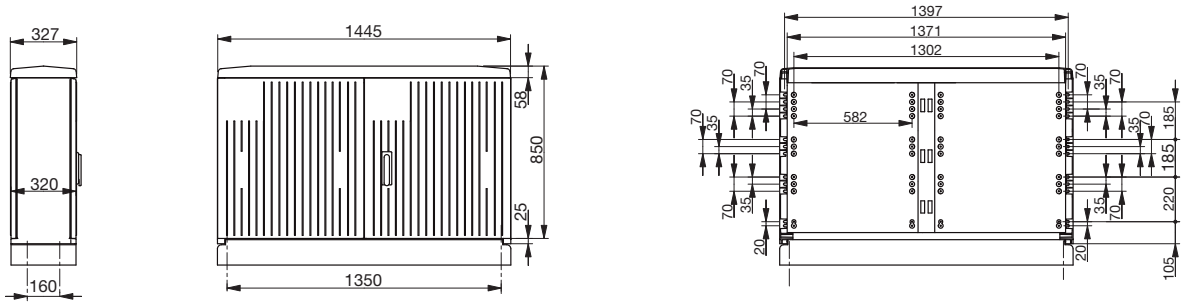

EH3/AP - 20

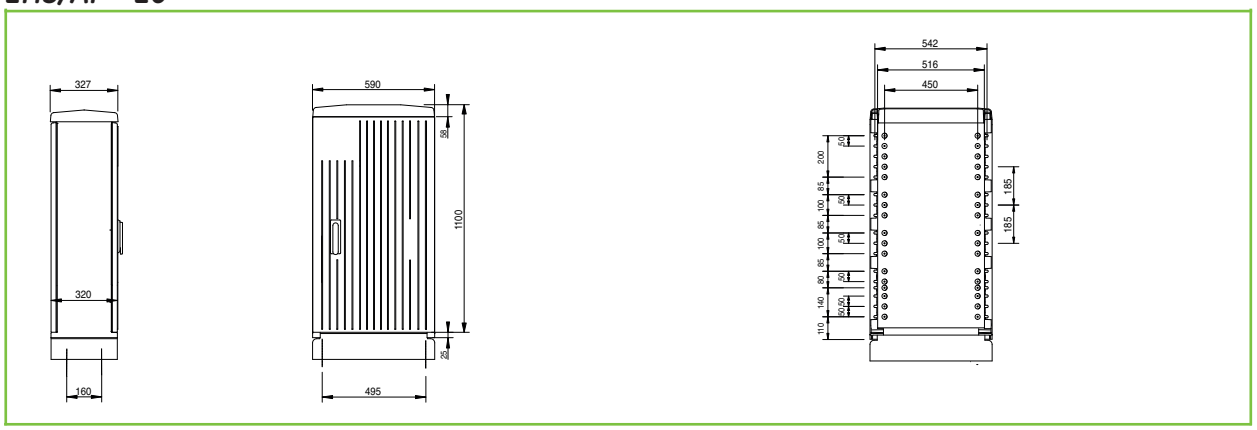

EH3/AP - 21

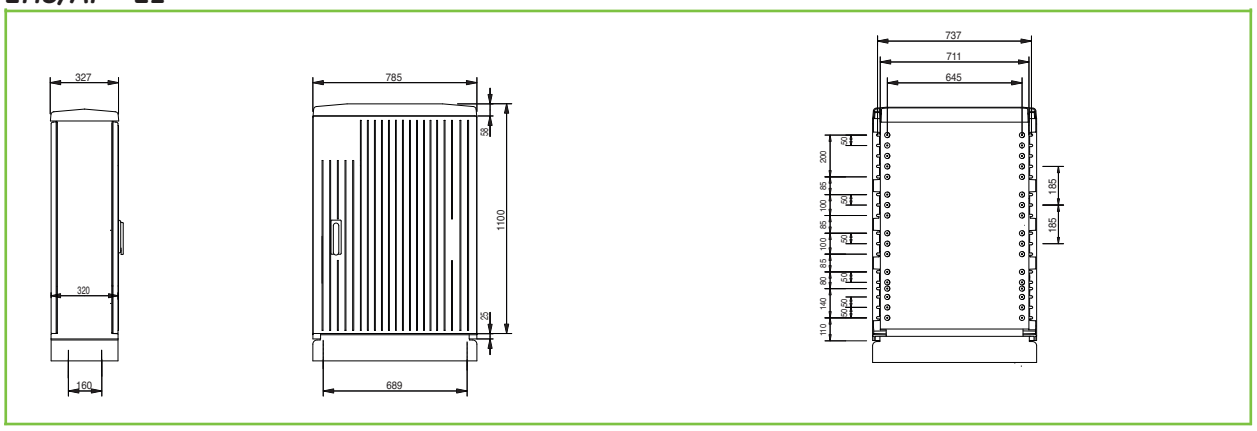

EH3/AP - 22

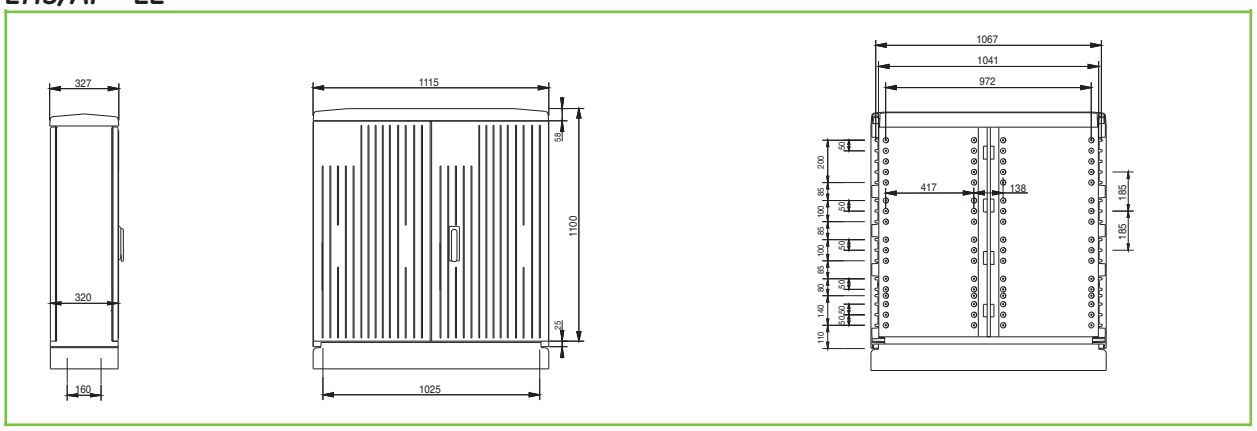

EH3/AP - 23

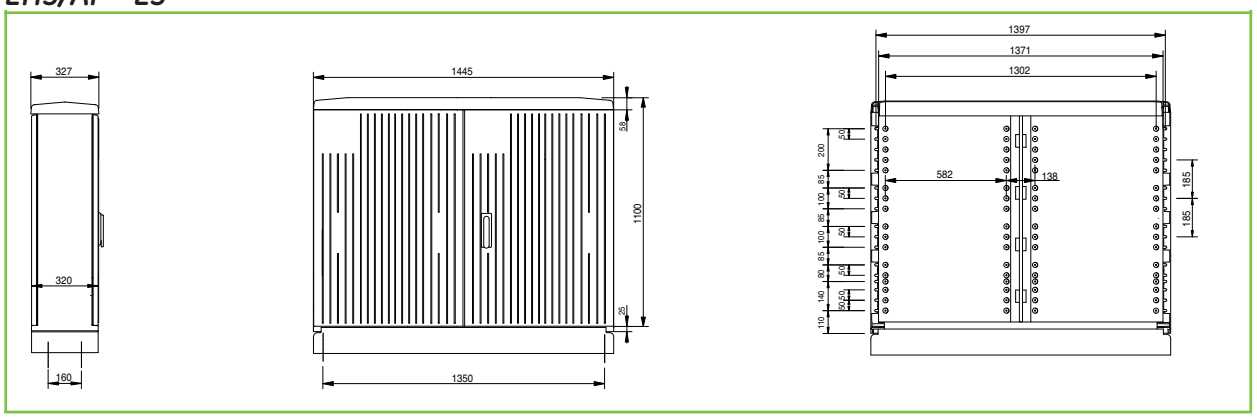

Polyester bases DIN 0-1-2

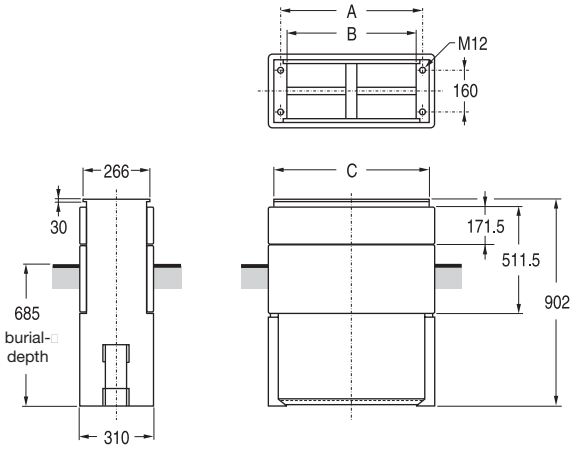

The dimensions of the base fixation points are in accordance with DIN 43629.

Dimensions			
DIN	0	1	2
A	495	690	1020
B	457	652	982
C	543	738	1068

Polyester bases DIN 3

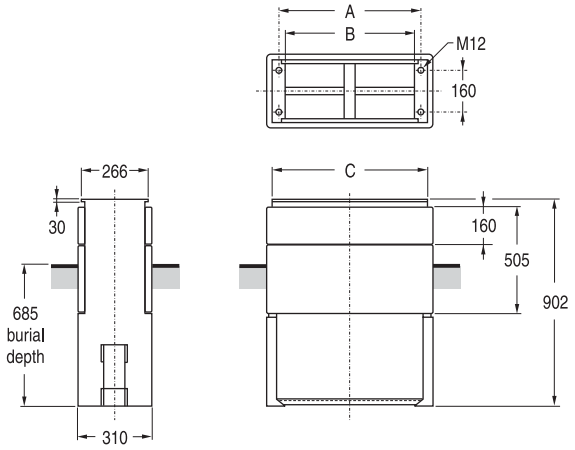

Dimensions	
DIN	3
A	1350
B	1315
C	1400

Bottom plate

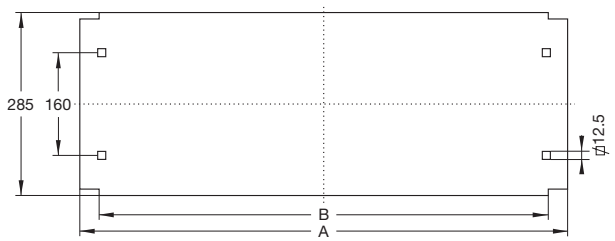

To be mounted between pedestal and DIN-base or as bottom plate of the enclosure.

Dimensions				
DIN	0	1	2	3
A	562	757	1086	1416
B	495	630	1020	1350

EH3/GD-AP 031 - EH3/GD-AP 041

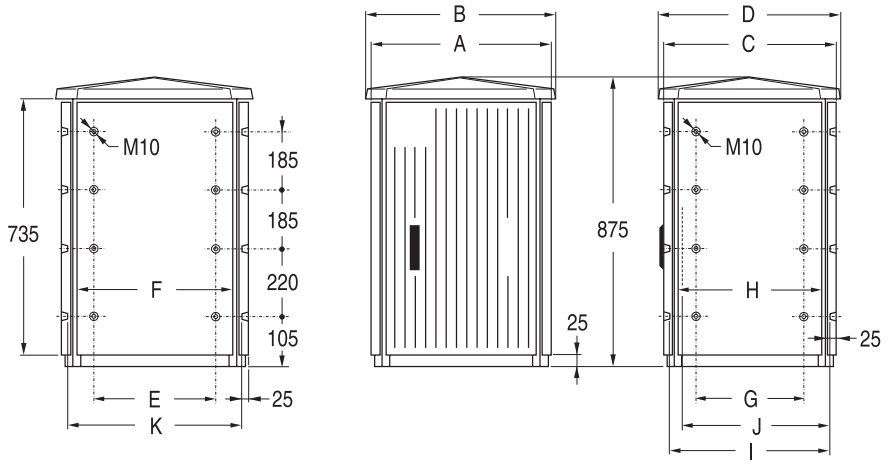

Dimensions		
DIN	031	041
A	676	871
B	716	911
C	424	424
D	464	464
E	450	645
F	500	695
G	200	200
H	250	250
I	376	376
J	342	342
K	628	823

EH3/GD-AP 051

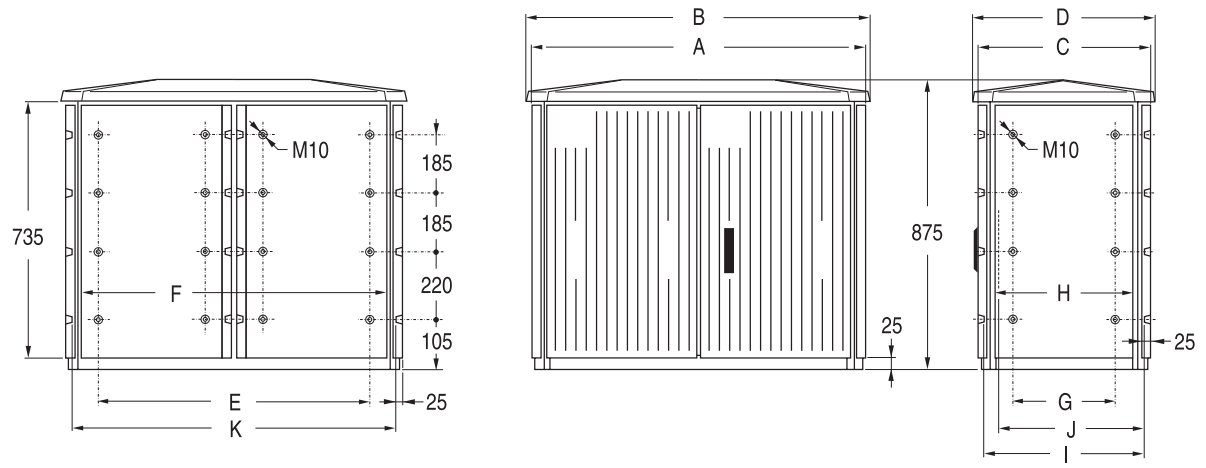

Dimensions											
DIN	A	B	C	D	E	F	G	H	I	J	K
051	1200	1240	424	464	972	1025	200	250	376	342	1152

Bottom plate

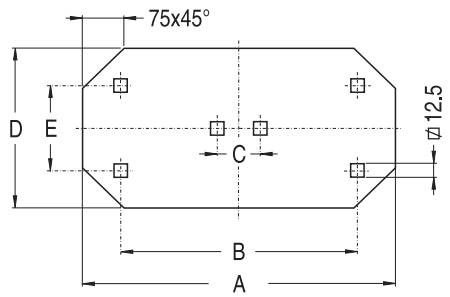

Dimensions						
DIN	031	233	041	243	051	253
A	635	635	830	830	1158	1158
B	495.5	496.5	691.5	691.5	1021	1021
C	-	-	-	-	50	50
D	380	632	388	632	380	632
E	245	498	246	498	245	498
No of holes	4	4	4	4	6	6

Polyester base

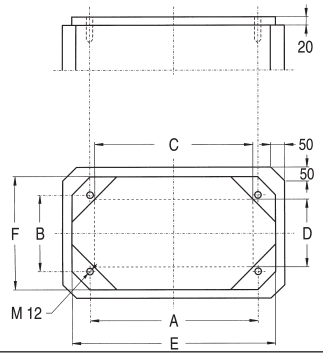

Dimensions						
DIN	031	233	041	243	051	253
A	498	498	693	693	1022	1022
B	246	498	246	498	246	498
C	456	456	651	651	980	980
D	205	456	204	456	204	456
E	626	626	821	821	1150	1150
F	374	626	374	626	374	626

EH3/GD-AP 233 - EH3/GD-AP 243

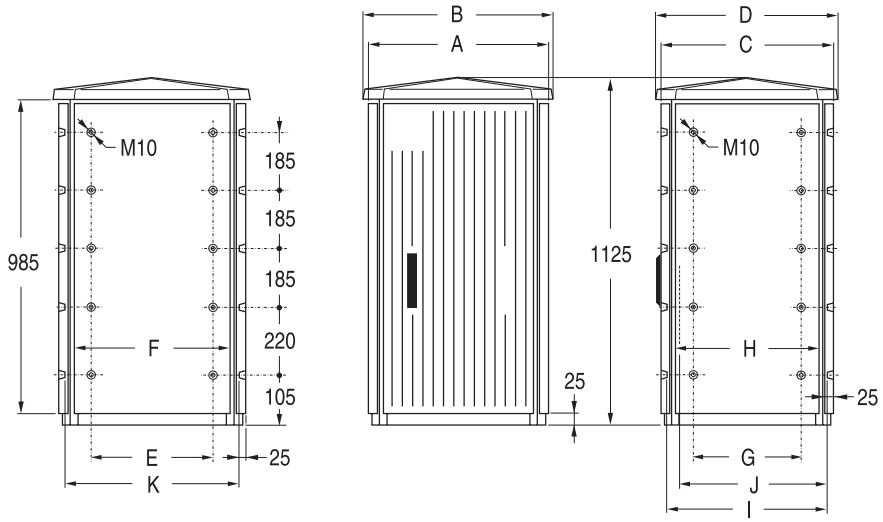

Dimensions		
DIN	233	243
A	676	871
B	716	911
C	676	676
D	716	716
E	450	645
F	500	695
G	450	450
H	500	500
I	628	628
J	594	594
K	628	823

EH3/GD-AP 253

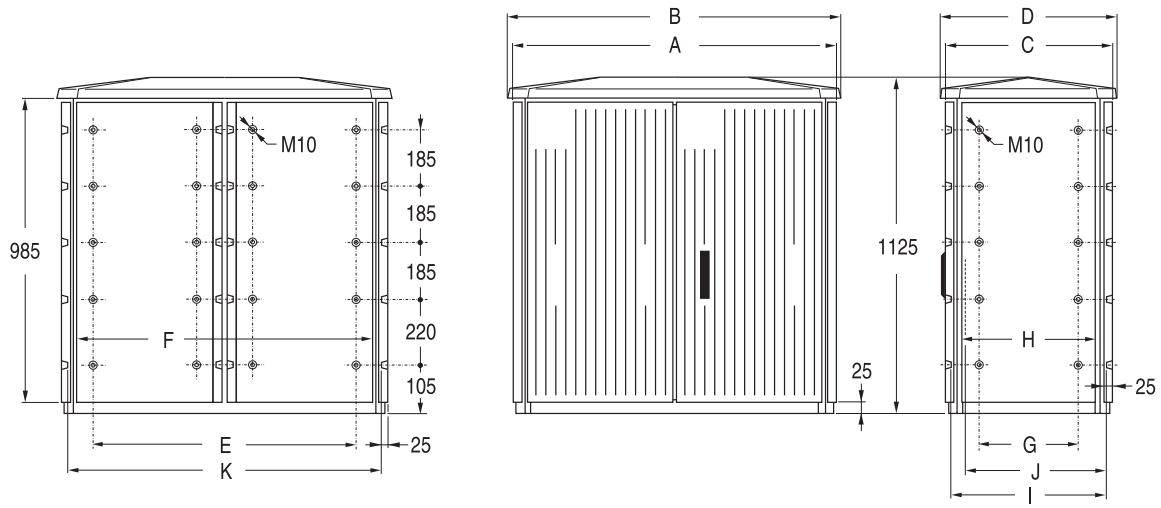

Dimensions											
DIN	A	B	C	D	E	F	G	H	I	J	K
253	1200	1240	676	716	972	1025	450	500	628	594	1152

EH4 - 00

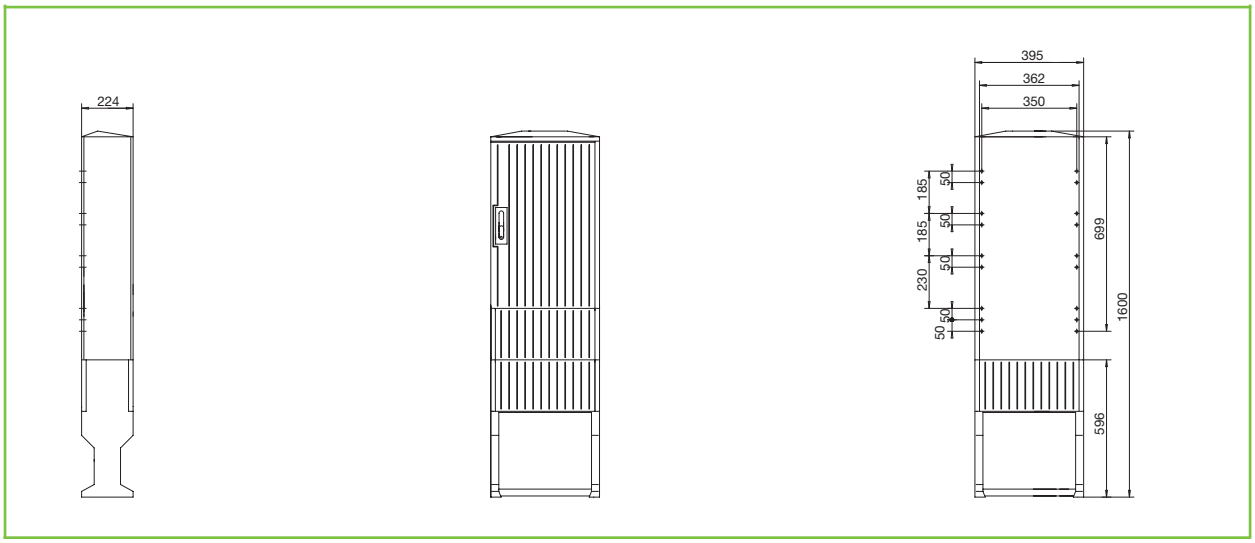

EH4 - 0

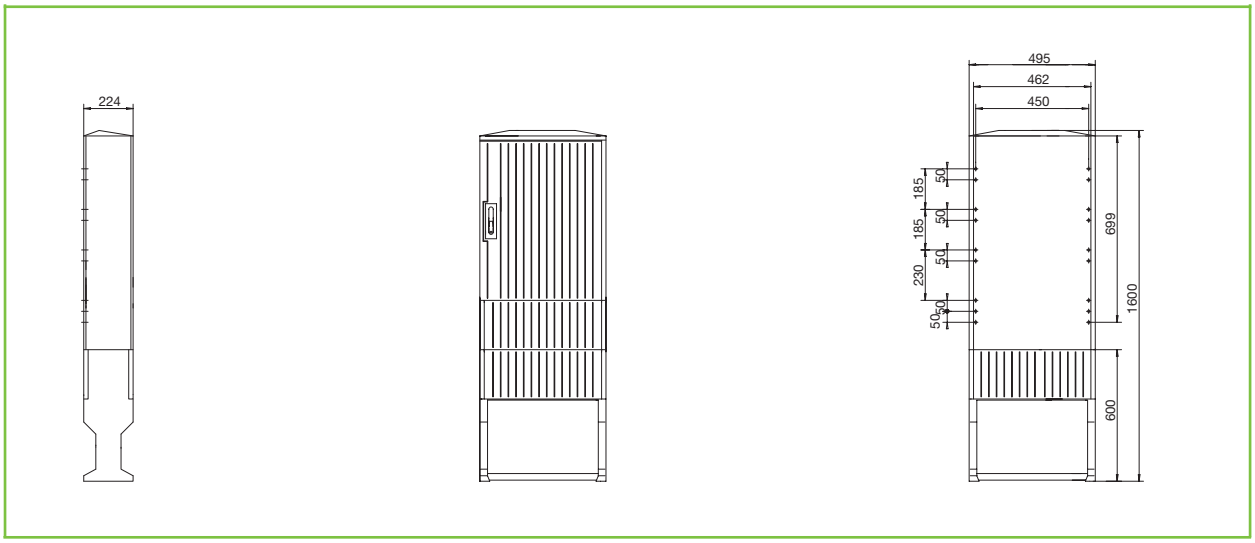

EH4 - 1

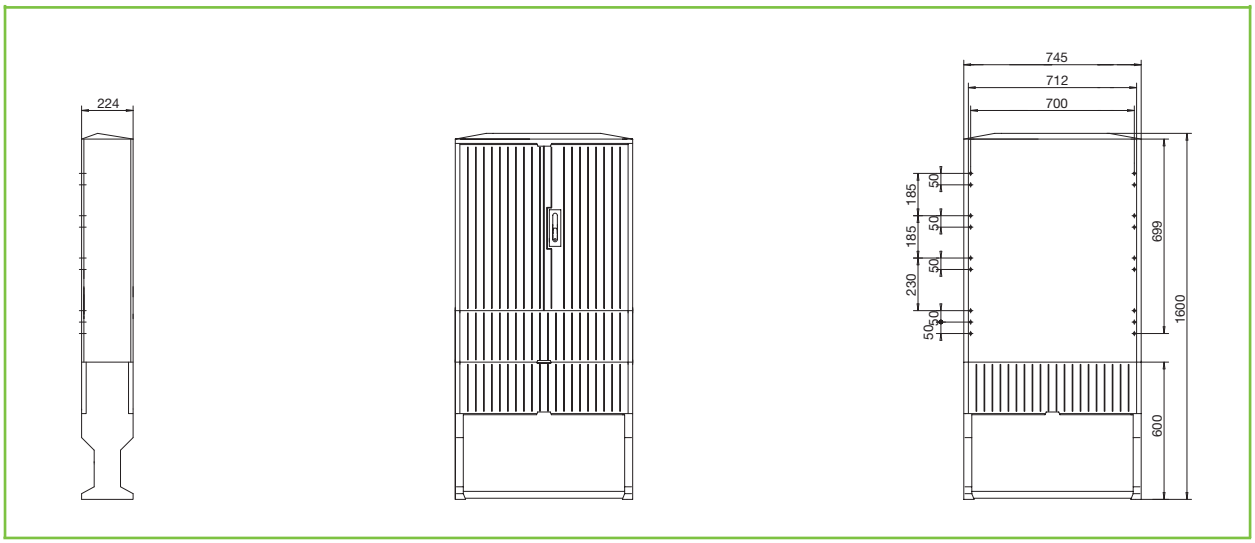

EH4 - S1

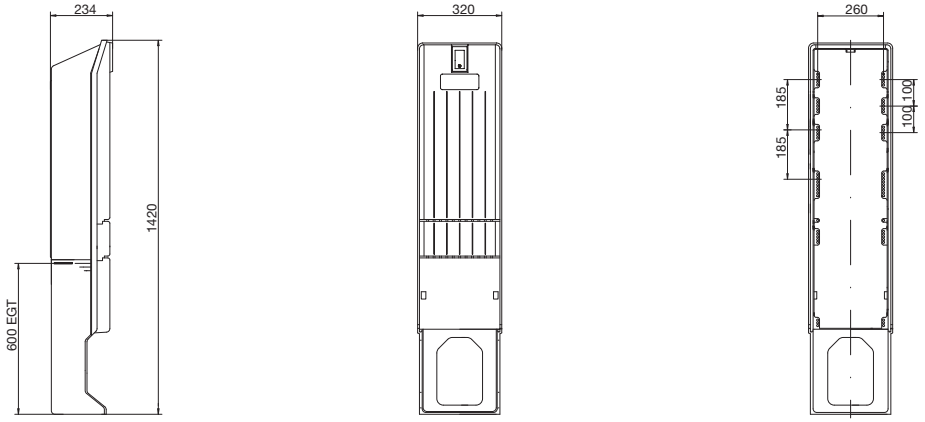
234
1420
600 EGT
320
260
185
185
100
100

EH4 - S2

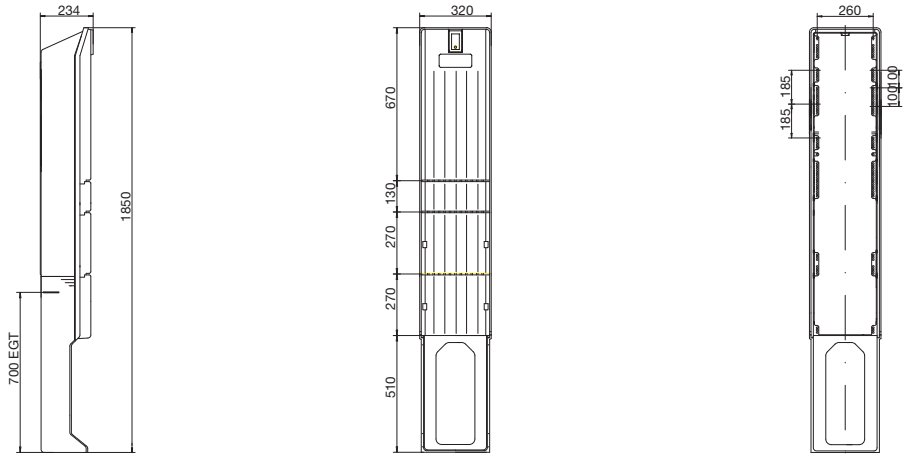
234
1850
700 EGT
320
670
130
270
270
510
260
185
185
100
100

EH6-00

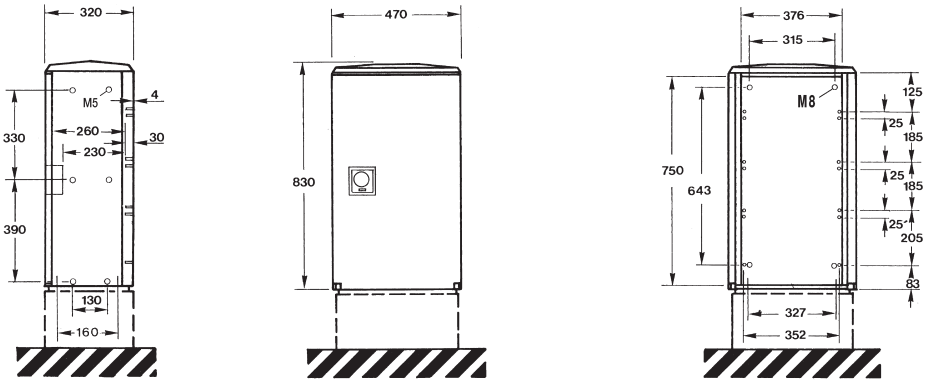

M5 = for dodge insert M5

M8 = for dodge insert M8

EH6-0

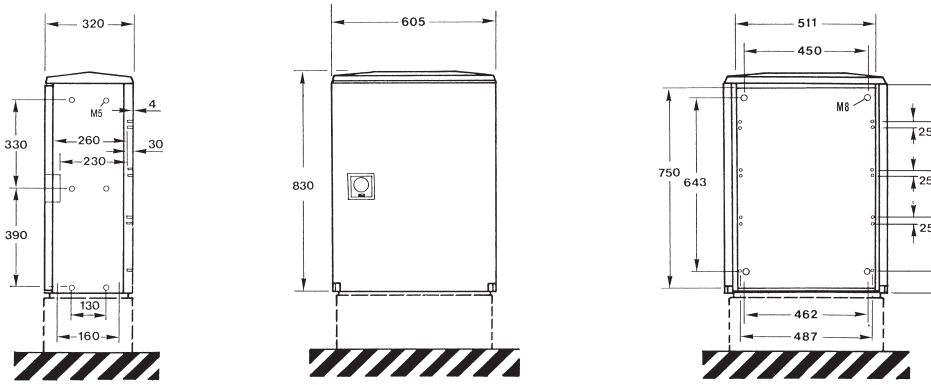

M5 = for dodge insert M5

M8 = for dodge insert M8

EH6-1

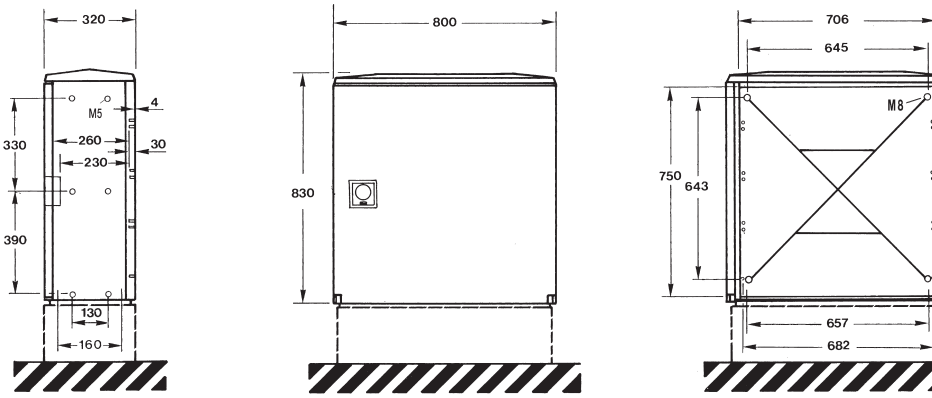

M5 = for dodge insert M5

M8 = for dodge insert M8

Bottom plate

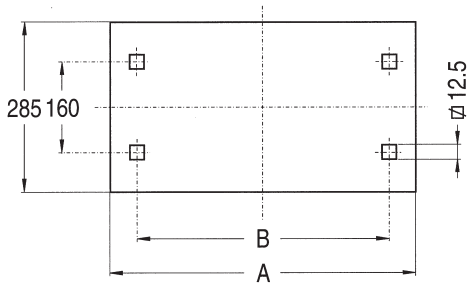

Dimensions			
DIN	00	0	1
A	427	562	757
B	359	495	690

Polyester base

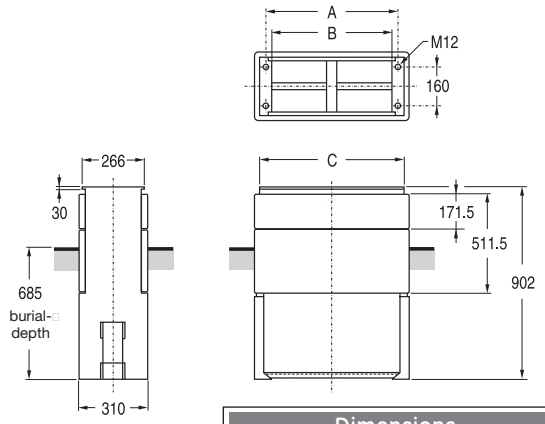

The dimensions of the base fixation points are in accordance with DIN 43629

Dimensions			
DIN	00	0	1
A	360	495	690
B	322	457	652
C	408	543	738

Pedestals with single door

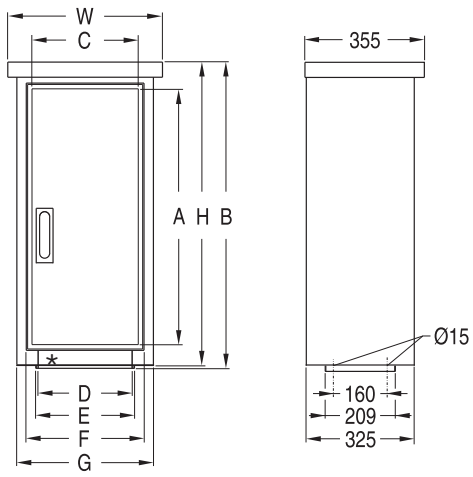

*Pedestals with removable sill profile

Dimensions										
DIN	Type	H	W	A	B	C	D	E	F	G
00	**RVL 300**	652	460	540	669	316	240	294	360	410
00	**RVN 300**	902	460	790	919	316	240	294	360	410
0	**RVL 30**	652	595	540	669	451	375	429	495	545
0	**RVN 30**	902	595	790	919	451	375	429	495	545
0	**RVD 30**	1002	595	890	1019	451	375	429	495	545
1	**RVL 31**	652	790	540	669	646	570	624	690	740
1	**RVN 31**	902	790	790	919	646	570	624	690	740
1	**RVD 31**	1002	790	890	1019	646	570	624	690	740
1	**RVH 31**	1152	790	1040	1169	646	570	624	690	740

Base

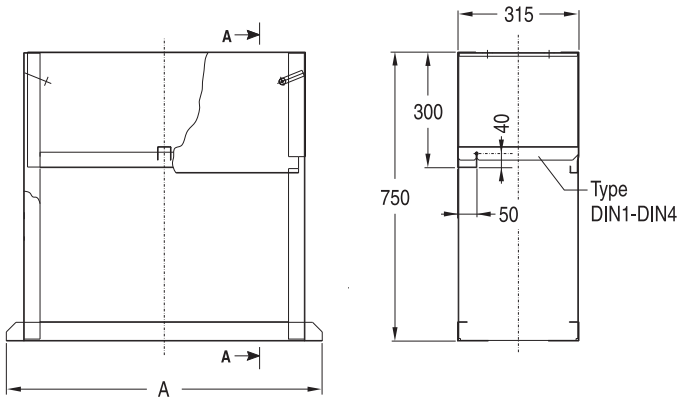

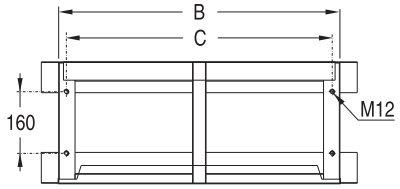

Dimensions				
DIN	Type	A	B	C
00	**RF200**	490	400	360
0	**RF20**	625	535	495
1	**RF21**	820	730	690
2	**RF22**	1150	1060	1020
3	**RF23**	1470	1390	1350
4	**RF24**	1800	1720	1680

Pedestals with double door

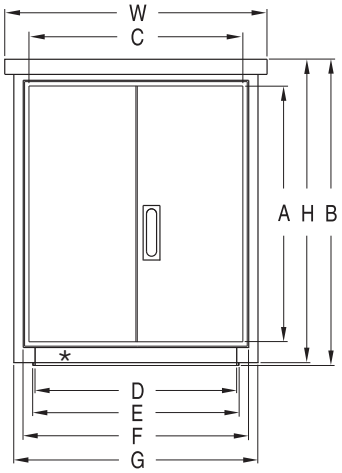

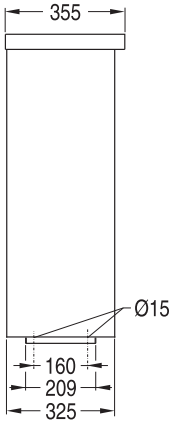

*Pedestals with removable sill profile

Two compartments

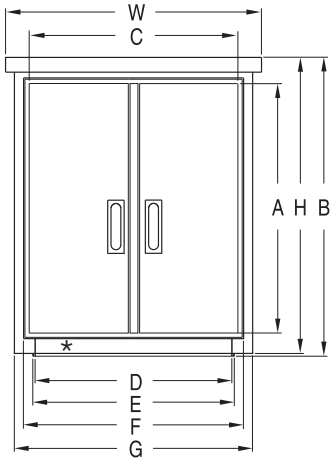

Cross section

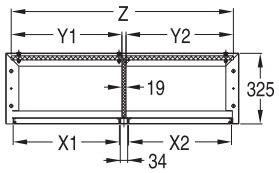

Dimensions										
DIN	Type	H	W	A	B	C	D	E	F	G
2	**RVL 32**	652	1120	540	669	976	900	954	1020	1070
2	**RVN 32**	902	1120	790	919	976	900	954	1020	1070
2	**RVD 32**	1002	1120	890	1019	976	900	954	1020	1070
2	**RVH 32**	1152	1120	1040	1169	976	900	954	1020	1070
3	**RVN 33**	902	1450	790	919	1306	1230	1284	1350	1400
3	**RVD 33**	1002	1450	890	1019	1306	1230	1284	1350	1400
3	**RVH 33**	1152	1450	1040	1169	1306	1230	1284	1350	1400
3	**RVS 33**	1352	1450	1240	1369	1306	1230	1284	1350	1400
4	**RVN 34**	902	1780	790	919	1636	1560	1614	1680	1730
4	**RVD 34**	1002	1780	890	1019	1636	1560	1614	1680	1730
4	**RVH 34**	1152	1780	1040	1169	1636	1560	1614	1680	1730
4	**RVS 34**	1352	1780	1240	1369	1636	1560	1614	1680	1730

Dimensions					
Type	X1	X2	Y1	Y2	Z
RVL 32 S1 ZZ	480	480	500	500	1020
RVN 32 S1 ZZ	480	480	500	500	1020
RVN 32 S2 ZZ	315	645	335	665	1020
RVN 32 S3 ZZ	645	315	665	335	1020
RVH 32 S1 ZZ	480	480	500	500	1020
RVH 32 S2 ZZ	315	645	335	665	1020
RVH 32 S3 ZZ	645	315	665	335	1020
RVN 33 S1 ZZ	645	645	665	665	1350
RVN 33 S2 ZZ	480	810	500	830	1350
RVN 33 S3 ZZ	810	480	830	500	1350
RVH 33 S1 ZZ	645	645	665	665	1350
RVH 33 S2 ZZ	480	810	500	830	1350
RVH 33 S3 ZZ	810	480	830	500	1350

Remark: other dimensions identical to RVL 32 / RVN 32 / RVN 33 / RVH 32 / RVH 33

Type "Stadion" (Stadium)

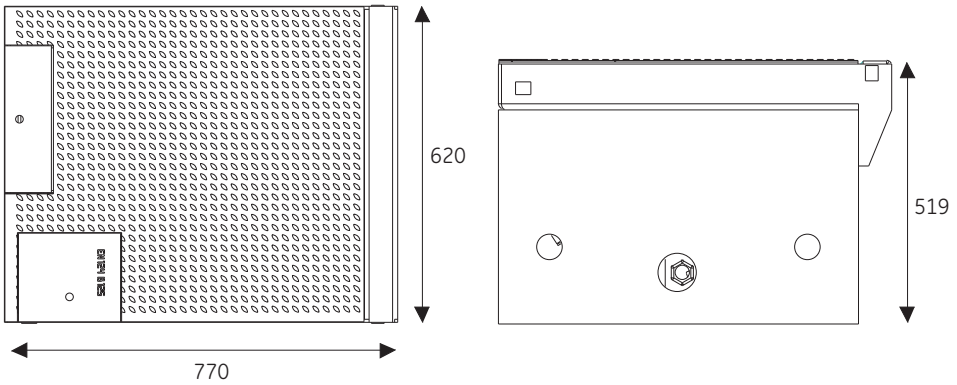

Type "Fair"

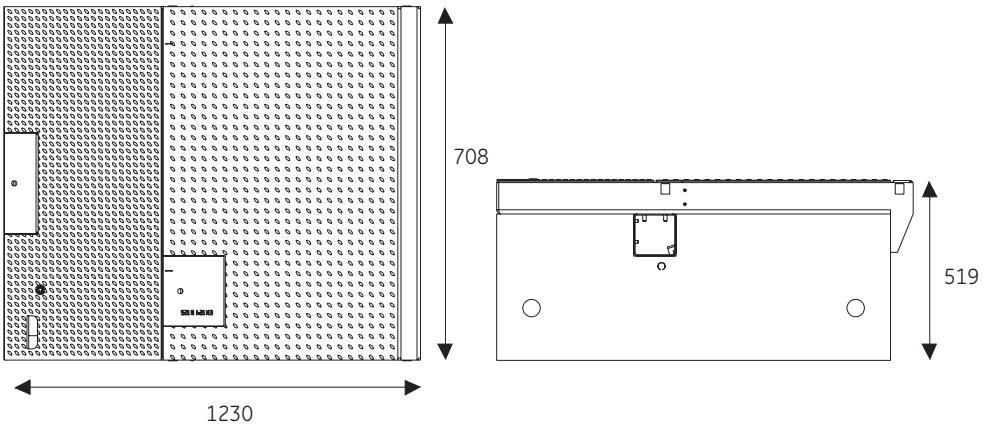

Type "Market"

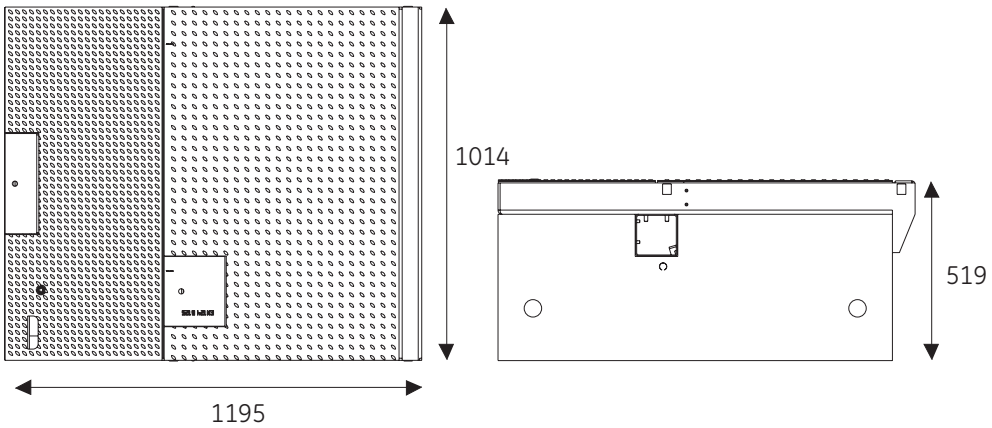

Filter fan LV 80 and LV 85

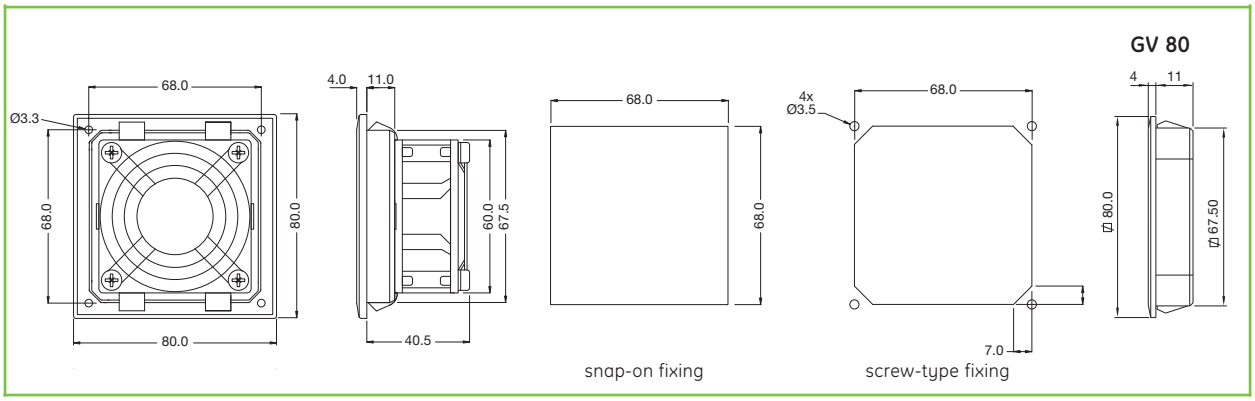

Filter fan LV 100

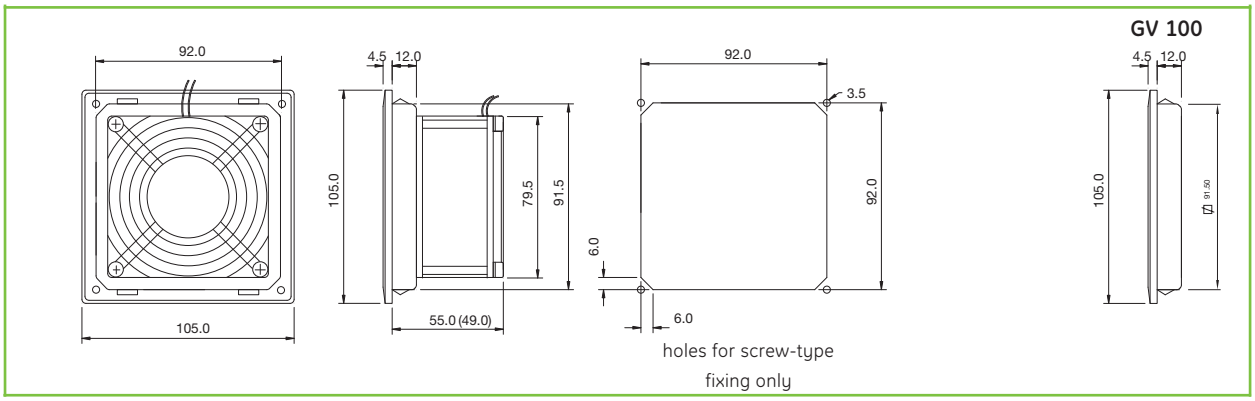

Filter fan LV 200

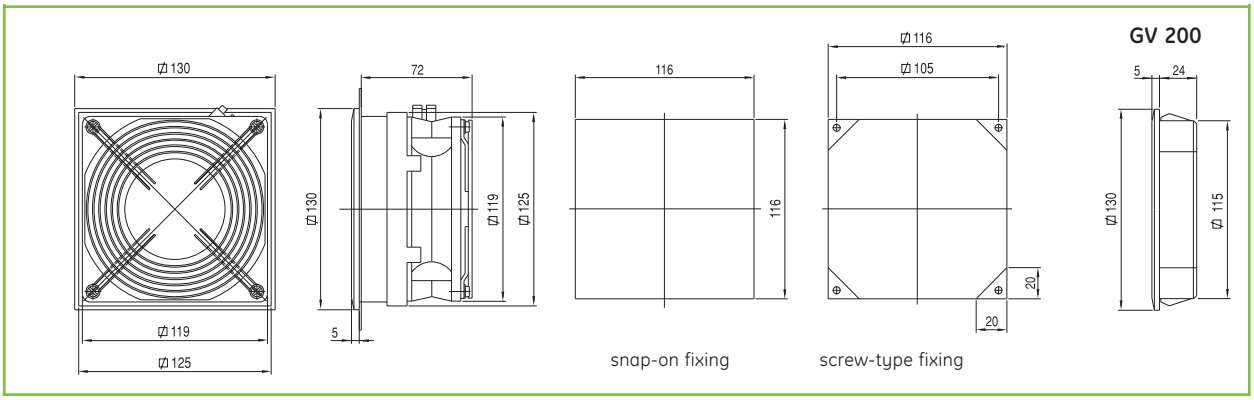

Filter fan LV 250

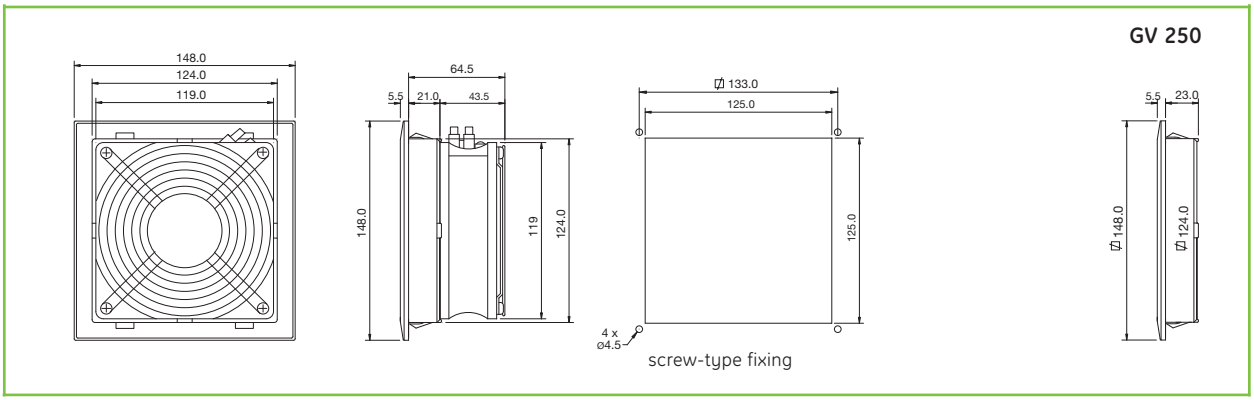

Filter fan LV 300

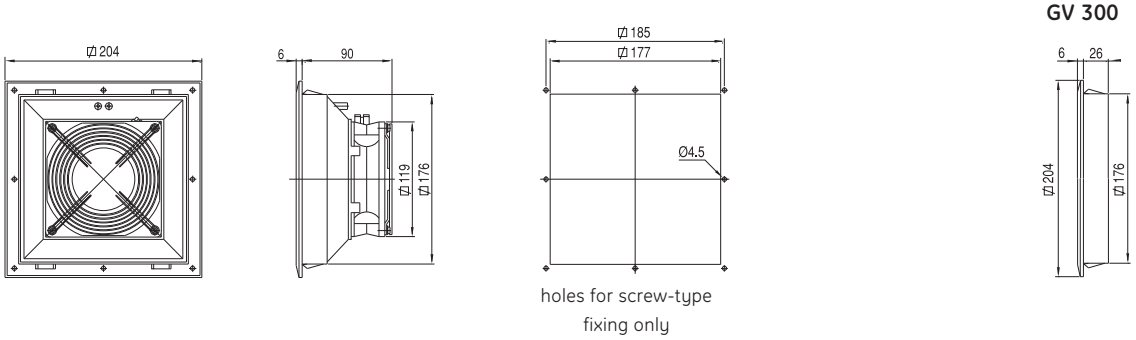

Filter fan LV 400

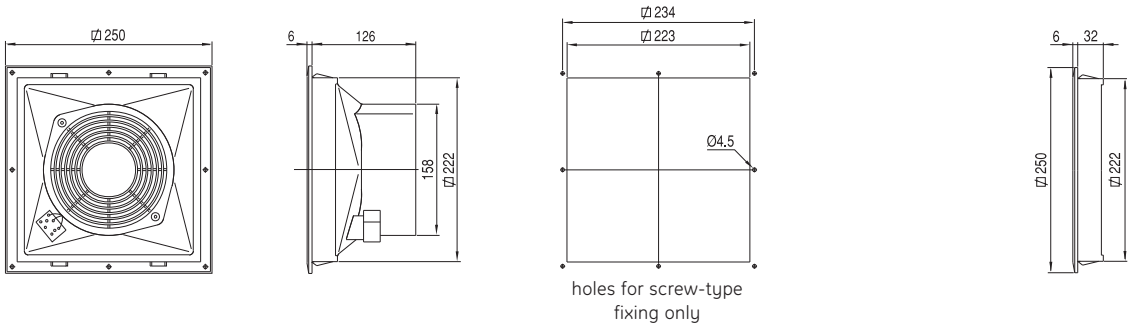

Filter fan LV 500

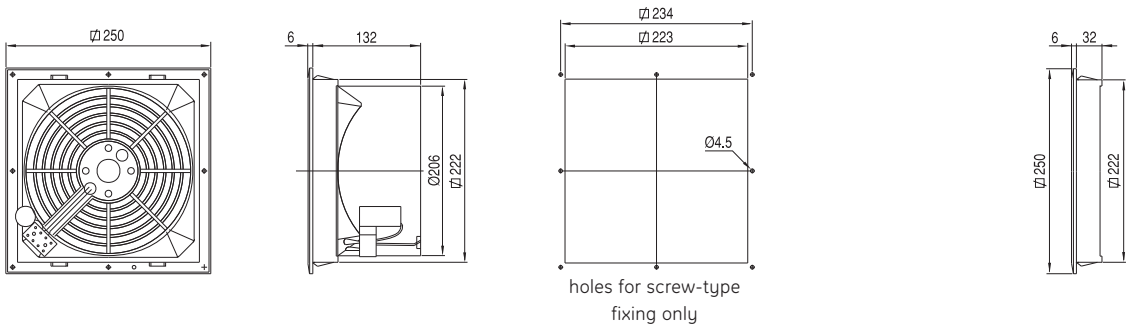

Filter fan LV 600

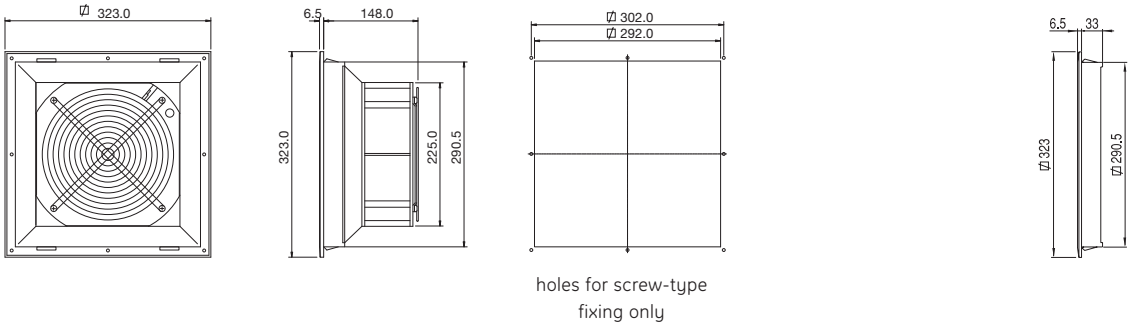

Filter fan LV 700

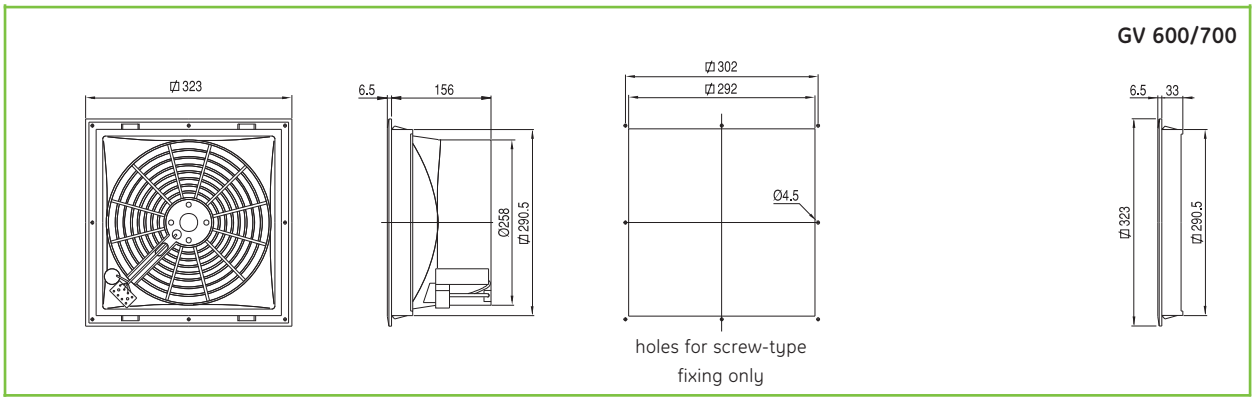

MultiBox

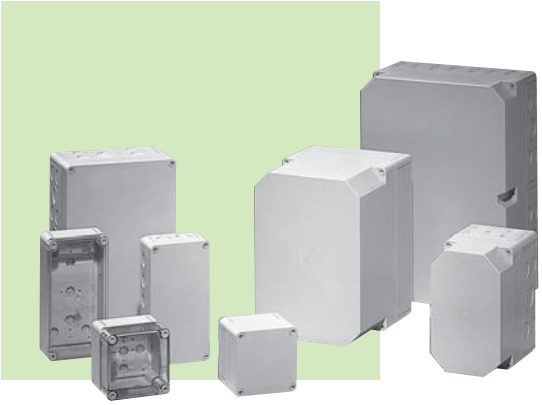

Small multipurpose boxes

- The range comprises 11 different basic box sizes, from 65 x 65 mm up to 361 x 254 mm, with up to 3 different cover depths and two designs:
  - with grey lid
  - with transparent lid.
- They are suitable for applications that require light weight and durability.
- The base is manufactured from glass-fibre reinforced polycarbonate (type PC) or polystyrene (type PS), both dyed in mass RAL 7035 (light grey).
- Glass-fibre reinforced polycarbonate bases (type PC) come with smooth side walls (only one Metric entry) or with several Metric knock-outs.
- Polystyrene bases (type PS) come with smooth side walls or with several Metric knock-outs.
- The lid is manufactured from transparent or opaque grey polycarbonate or grey polystyrene.
- The lid is fixed to the base by means of cover screws in polyamide.
- Polycarbonate boxes can withstand temperatures from -35° to +120°C, the polystyrene boxes temperatures between -40° and +70°C.
- The box offers maximum protection to the user and the equipment by means of total insulation ⧈ and a protection degree as per IEC 60529 and also complies with the impact-resistance standard as per EN 62262 and IEC 62262.
  - boxes type PC, IP66-IK08
  - boxes type PS, IP66-IK07
- Materials are halogen-free.
- Both types (PC and PS) are self-extinguishing according UL94-V2.
- Boxes offer good resistance to chemical and aggressive influences.
- The box is secured to the wall by screws directly through the base, direct through the four corner shafts of the base (under the cover screws) or by using external mounting brackets.
- Boxes may be fitted with external hinges and/or padlocking as a protection against unauthorised access.
- Boxes can be combined in height and in width by means of a combi set.
- It is possible to mount DIN profiles (15x5x1 and 35x7.5x1) as well as mounting plates.
- Tailor-made boxes are available upon request: coloured, painted, overprinted, machine finished, EMC shielded.

MultiBox Xtra

Multipurpose boxes

- The range comprises 6 different basic box sizes, from 300 x 200 mm up to 600 x 400 mm, with up to 2 different cover depths per dimension (170, 210,230, 270 mm) and two different executions:
  - with grey lid,
  - with transparent lid.
- They are suitable for applications that require ligh weight and durability.
- The base is manufactured from polycarbonate (type PC) or Acrylnitril-Butadien-Styrol (type ABS), both dyed in mass RAL 7035 (light grey).
- The enclosures have smooth side-walls, holes for cable Entries can be made where needed.
- Covers are made out of transparent or light-grey (RAL7035) PC or ABS.
- Covers are fixed to the base by means of a 180° degree turned polyamide screw.
- Polycarbonate enclosures withstand a temperature rating from -35° up-to +120°C, ABS enclosures withstand a temperature rating from +40° up-to +70°C.
- The box offers maximum protection to the user and the equipment by means of total insulation and a protection degree as per IEC 60529 and also complies with the impact-resistance standard as per IEC 62262.
  - boxes type PC, IP66/67-IK08
  - boxes type ABS, IP66/67-IK08
- Materials are halogen-free.
- Both types (PC and ABS) are self-extinguishing/flame retardant (PC960°C and ABX 650°C).
- Boxes offer good resistance to chemical and aggressive influences.
- The box is secured to the wall by screws directly through corner shafts in the base or by using external mounting brackets.
- Boxes may be fitted with external hinges.
- It is possible to mount DIN profiles (35x7.5x1) as well as metal and isolated (Pertinax) mounting plates.
- Tailor-made boxes are available upon request: coloured, painted, overprinted, machine finished, etc.

APO

Modular polyester boxes

- The range consists of nine types with module 150/185 mm, with dimensions ranging from 185 x 150 mm to 600 x 600 mm in five different designs:
  - with screwed polyester lid
  - with screwed polycarbonate lid
  - with screwed flap lid
  - with hinged polyester lid
  - ventilated with hinged polyester lid and lock.
- The base is made from self-extinguishing, glass-fibre-reinforced and halogen-free polyester, dyed in mass RAL 7035 (light grey).
  The glass-fibre content is a minimum of 20%.
  The base also comes with a minimum of four M4 threaded inserts for mounting metal, perforated metal and pertinax (insulated) mounting plates, and also mounting frames for modular equipment.
  The base also has space for four M6 threaded inserts.
- The lid is manufactured:
  - either from self-extinguishing, glass-fibre-reinforced and halogen-free polyester, dyed in mass RAL 7035 (light grey)
  - or from transparent polycarbonate.

  The design as flap lid: frame in self-extinguishing, glass-fibre-reinforced and halogen-free polyester, dyed in mass RAL 7035 (light grey), the window in transparent polycarbonate.
- The box can withstand temperatures from -50° to +150°C (peak).
  (-35° to +120°C for the box with polycarbonate lid).
- The useful mounting depth of the box can be expanded by means of depth extension frames without affecting the original protection degrees.
- The box offers maximum protection for user and equipment thanks to the total insulation ⧈ and the protection degree as per IEC 60529 and also complies with the impact-resistance standard EN 62262 and IEC 62262.
  - box with screwed polyester lid, IP67-IK10
  - box with screwed polycarbonate lid, IP66-IK10
  - box with screwed flap lid, IP67-IK10
  - box with hinged polyester lid, IP55-IK10
  - ventilated box with hinged polyester lid and lock, IP44-IK10.
- Boxes are suitable for outdoor use. Heating and ventilation need to be considered depending on environmental conditions.
- There are various ways of securing the box to the wall:
  - using screws in the four corner holes
  - using fixing lugs secured through the four corner holes
  - using stainless steel fixing clamps, fitted directly to the rear of the base in the reinforcements provided.

  In all these cases, the IP values and total insulation are guaranteed.
- All boxes have the same depth and can be assembled by means of coupling frames.
- Boxes have the UL certification mark, in accordance with UL standard 508 and also comply with the CSA certification mark as per C22.2 no. 94.
  - boxes with polyester lid, types 3, 3R, 4, 4X, 6, 6P, 12 and 13
  - boxes with polycarbonate lid, types 3, 3R, 4, 4X, 12 and 13
  - boxes with flap lid, types 3, 3R, 4, 4X, 6, 12 and 13.
- Boxes also bear the following certification marks:
  - Lloyd's Register of Shipping
  - Germanischer Lloyd
  - KEMA KEUR
  - BASEEFA.

MultiCab

Multipurpose cabinets

- The range comprises 5 different basic cabinet sizes, from 300 x 200 mm up to 600 x 400 mm, with 1 cover depth per dimension (180, 200,220mm) and two different executions:
  - with grey lid,
  - with transparent lid.
- They are suitable for applications that require light weight and durability.
- The base is manufactured from polycarbonate (type PC) or Acrylnitril-Butadien-Styrol (type ABS), both dyed in mass RAL 7035 (light grey).
- The enclosures have smooth side-walls, holes for cable entries can be made where needed.
- Covers are made out of transparent or light-grey (RAL7035) PC or ABS.
- Covers are locked by means of a double-bit or latch mounted sideways of the enclosure base/cover. External hinges allow an easy opening.
- Polycarbonate enclosures withstand a temperature rating from -35° up-to +120°C, ABS enclosures withstand a temperature rating from +40° up-to +70°C.
- The cabinet offers maximum protection to the user and the equipment by means of total insulation and a protection degree as per IEC 60529 and also complies with the impact-resistance standard as per IEC 62262.
  - cabinets type PC, IP65-IK08
  - cabinets type ABS, IP65-IK08
- Materials are halogen-free.
- Both types (PC and ABS) are self-extinguishing/flame retardant (PC960°C and ABX 650°C).
- Cabinets offer good resistance to chemical and aggressive influences.
- The cabinet is secured to the wall by screws directly through corner shafts in the base or by using external mounting brackets.
- It is possible to mount DIN profiles (35x7.5x1) as well as metal and isolated (Pertinax) mounting plates.
- Tailor-made cabinets are available upon request: coloured, painted, overprinted, machine finished, etc.

ARIA

Universal polyester cabinets

- The range comprises seven different sizes ranging from 315 x 215 mm to 1035 x 835 mm in two different designs:
  - cabinet with plain door
  - cabinet with glazed door.
- The cabinet is manufactured from self-extinguishing, glass-fibre-reinforced and halogen-free polyester, dyed in mass RAL 7035 (light grey). The glass fibre content is a minimum of 20%. The cabinet is fitted with four threaded pins and four nuts to secure perforated metal, Sendzimir zinc coated sheet steel or pertinax (insulated) mounting plates and mounting frames.
- The cabinet consists of two parts: the base and the door. The removable door is secured to the base by two hinges and the opening angle is a maximum of 180°.
  In a closed position, the hinges are invisible. Closure is controlled by a three-point locking mechanism operated by a single central operating grip or handle (single-point closure for cabinets 300 x 200 mm and 400 x 300 mm), two-point closing for cabinets 500 x 400 mm, 600 x 400 mm and 700 x 500 mm as an alternative. The door is fitted with a seamless seal and the total concept is such that stagnating water on the seal is avoided.
  A doorlifter (for bigger dimensions) ensures the door takes its center position during closing.
  The four angles in the base are double-walled.
  Ventilation against condensation can be done without the ventilation grids being visible when the cabinet is closed.
- The mounting frame or the mounting plate can be equipped and wired outside the cabinet.
  They are placed subsequently in the cabinet:
  - either on the securing points in the rear of the base provided for this purpose, without any further arrangement being necessary
  - or on special mounting supports which slide into the moulded-on C-profiles in the angles of the cabinet.
- The equipment is protected by a single-piece cover plate, manufactured from self-extinguishing, glass-fibre-reinforced and halogen-free polyester, dyed in mass RAL 7035. The cover plate is secured with snap-on fixing screws, which can be easily removed by the use of tools. This guarantees the protection degree of IP20 as for IEC 60529.
  If required, the cover plate can be fitted with hinges.
- Protection of the modular devices can also be obtained by using individual modular cover plates (h = 150 mm) in PVC material, also offering IP20. These individual modular cover plates can be plain or with cut-out for DIN-rail equipment.
- The cabinets can withstand temperatures from -50° to +150°C (peak).
- The cabinet offers maximum protection to user and equipment thanks to the total insulation ⧈ and protection degree IP66 as per IEC 60529 and also complies with the impact-resistance standard EN 62262 and IEC 62262.
  - IP66-IK10 cabinets with plain door and central locking system.
  - IP65-IK10 cabinets with plain door and two-point locking.
  - IP66-IK07 cabinets with glazed door.
- The cabinets are suitable for outdoor use. Heating and ventilation need to be considered depending on environmental conditions.
- The cabinets are secured to the wall by:
  - either four 304 stainless steel or polyamid mounting brackets, screwed along the back of the cabinet using stainless steel bolts which do not penetrate the back
  - or directly by means of screws in the double-walled corners
  - or directly through the base by means of four screws, sealed by a non removable sealing cap.
  - In these cases the IP value and the overall total insulation remain guaranteed.
- The cabinets have the UL approval in accordance with UL standard 508 types 3, 3R, 3S, 4, 4X, 12 and 13.
- They also comply with the CSA certification mark as per C22.2 no. 94 types 3, 3R, 3S, 4, 4X, 12 and 13.
- The cabinets also bear the certification mark: Lloyd's Register of Shipping.

PolySafe

Multipurpose polyester cabinets

- The range consists out of fourteen types with module 250 mm, with dimensions ranging from 500x500 mm up to 1250x1000 mm, in one depth 320 mm and two different designs :
  - cabinet in-factory assembled with plain door
  - cabinet in-factory assembled with glazed door

  Four stainless steel wall mounting brackets are also supplied.
- The cabinet is manufactured from self-extinguishing, hot moulded, glass fibre reinforced and halogen-free polyester, dyed in mass RAL 7035 (light grey). The glass-fibre content is a minimum of 25%.
- The cabinet exists out of a back panel, two side panels, a top panel, a base panel and a flush-mounted door.
- The door is secured to the main structure of the cabinet by means of hinges, each step of 250mm, and its angle of opening is a maximum of 100°. The hinges are not visible when the door is in closed position.
- Closure is effected by a five-point locking mechanism (three-point for widths 500 mm) controlled by a single central operating handle.
- The operating handle is suitable for all types of profile half cylinder locks (standard depth 40 mm, alternative depth 45 mm).
- A doorlifter (for bigger dimensions) ensure the door takes its center position during closing.
- The standard depth of the cabinet is 320 mm, but can be increased to 640 mm by using a 320 mm extension kit.
- The cabinets can be coupled in height and in width by means of a coupling kit.
- The mounting plate (in pertinax, in Sendzimir zinc coated sheet steel or in perforated metal) can be set up and wired outside the cabinet. It is placed subsequently in the cabinet.
  The mounting plate is secured directly to the securing points provided on the back panel of the cabinet or mounted on four depth adjustment brackets (steps of 12.5 mm).
- The modular mounting frame for DIN-rail equipment is completed with modular functions height 150 mm, plain or with cut-outs, or modular plain functions height 300 mm. They guarantee a protection degree of IP20 with open doors.
- The addition of a rainhood allows for natural ventilation (IP44/IP54) in the cabinet.
- The cabinets are designed for wall mounting, floor standing and pole fixing.
- The cabinets are resistant to temperatures of -50° up to +150°C (peak).
- The cabinet offers maximum protection to user and equipment thanks to the total insulation ⧈ and the high protection degree IP65 (IP55 for cabinets with glazed door) according to IEC 60529, EN 60529. It also complies with the impact-resistance degree IK10 (IK07 for cabinets with glazed door) according to EN 62262 and IEC 62262.
- The cabinets are suitable for indoor as well as outdoor use. Heating and ventilation need to be considered depending on environmental conditions.
- The cabinets are secured to the wall by means of stainless steel mounting brackets which are clinged and fixed on the back without using any screws. These wall mounting brackets can be mounted vertical or horizontal.
  The cabinets with rain hood are secured to the wall by means of four special simular brackets.
- A cabinet can be placed on the ground by using a floor mounting frame which is anchored to the ground together with the cabinet.
  All cabinets width 750 and 1000 mm can be mounted on a DIN-base by means of a DIN adaptor frame.
  In all these cases the IP degree as well as the total insulation are guaranteed.
- The cabinets have following approvals: UL and CSA
  - cabinets with single door: types 3, 3R, 3S, 4, 4X, 12, 12K and 13.
  - cabinets with double door: types 3, 3R, 3S, 4, 4X, 12, 12K and 13.
  - coupled cabinets: types 3, 3R, 3S, 12, 12K and 13.
- Standards: IEC 60529, EN 60529, EN 62262, IEC 62262, EN 62208, IEC 62208, IEC 60439-5
- The cabinets also bear the certification mark: Lloyd's Register of Shipping.

VMS

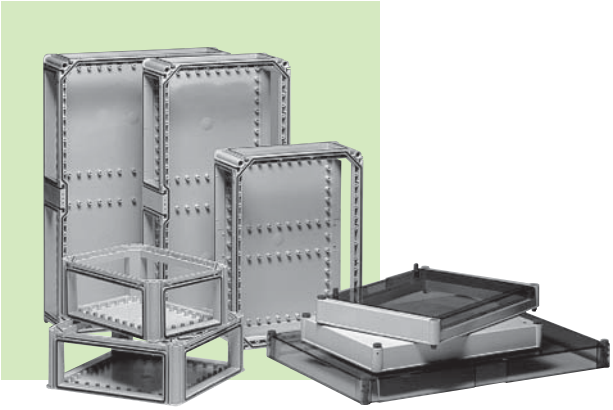

Modular enclosures system

- The range consists of five types with module 100 mm, with dimensions ranging from 320 x 220 mm to 640 x 440 mm.
- The bases are manufactured from self-extinguishing, glass-fibre-reinforced and halogen-free polycarbonate, dyed in mass RAL 7035 (light grey). The glass fibre content is at least 20%.
- Securing points are fitted in the base to secure metal and pertinax mounting plates, mounting frames, busbars, etc., by means of self-tapping screws.
  These securing points form rows parallel to the box edge and figure both in the base and top edge with a step between them of 25 mm.
- The bases, with four open walls, can be linked without screws using dowels. The open side walls are closed by means of click-in end-plates which are locked by keys.
- The lid is manufactured:
  - either from self-extinguishing, halogen-free polycarbonate, dyed in mass RAL 7035 (light grey)
  - or from self-extinguishing, transparent polycarbonate.

  The design as flap lid: the frame dyed in mass RAL 7035, the window transparent, both in self-extinguishing polycarbonate.
- The useful mounting depth of the box, 157 mm, can be expanded using depth extension frames.
- The end-plates are manufactured from self-extinguishing, glass-fibre-reinforced and halogen-free polycarbonate, dyed in mass RAL 7035 (light grey) and available in three designs:
  - as a blind end-plate
  - as a combi end-plate with Metric knockouts
  - as a cable entry end-plate for cable input up to Ø 75 mm.
- The boxes can withstand temperatures from -20° to +80°C.
- The box offers maximum protection for user and equipment thanks to the total insulation ⧈ and the protection degree as per IEC 60529 and also complies with the impact-resistance standard EN 62262 and IEC 62262.
  - individual, IP65-IK07
  - coupled, IP65-IK07
  - box with one depth extension frame, IP65-IK07
  - box with multiple extension frames, IP45-IK07
  - coupled with coupling set 2x220, IP44-IK07
  - box with cable entry, IP43-IK07
  - box with bridge, IP55-IK07.
- The box can be secured to the wall in various ways:
  - using screws in the four corner holes
  - using stainless steel mounting lugs through the four corner holes
  - using a supporting frame, consisting of at least two horizontal and two vertical C-profiles.

  If the assembly entails more than five boxes, a supporting frame is needed.
- A busbar system up to 1250A can be integrated by means of glass-fibre-reinforced polycarbonate busbar supports, with centre to centre distance between them of 320 mm, with a horizontal arrangement of the busbars (125A-250A) or parallel arrangement of two busbars per phase (250A-1250A).
  These guarantee a thermal short-circuit resistance between the phase rails with a maximum of 30kA (0,3 sec) and a dynamic short-circuit resistance between the phase rails of a maximum of 65kA peak.
- The boxes have the UL approval, in accordance with UL standard 508 and also comply with CSA certification mark as per C22.2 no. 94:
  - individual arrangement, types 2, 3, 3R, 3S, 5, 12 and 12K
  - coupled, types 2, 3, 3R, 3S, 5, 12 and 12K
  - coupled with coupling set 2 x 220, types 2 and 3R
  - box with hinged cover, types 2, 5, 12 and 12K
  - box with external hinges, type 2.
- The boxes also bear the KEMA KEUR and comply with following standards:
  - IEC 60439-1
  - EN 60439-1
  - BS5486 Part 1
  - DIN VDE 0660-Part 500.

Fix-o-Rail Senior

Type tested distribution enclosure conform to EN 60439-1

- Manufactured using sheet steel for the outer enclosure, and protected inside with insulated, self-extinguishing and halogen-free profiles.
- The sheet metal parts are pre-treated with iron phosphate and protected with epoxy polyester powder paint RAL 9016 giving smooth finish.
- The range consists of 5 different sizes:
  - two widths: 300 & 550 mm
  - three heights: 650 – 800 – 950 mm
  - one depth: 210 mm
- For modular devices from 48 modules up to 144 modules per enclosure, with 12 or 24 modules per row.
- Standard equipped with
  - a removable DIN rail frame in sendzimir zinc plated steel
  - polyester cover plates, self-extinguish and halogen-free, with the necessary cut outs for the modular devices.

  The center distance between two DIN profiles is 137.5 mm

  The maximum depth for the modular devices is 92.5 mm with a wiring space of 75 mm behind the components
- Top and bottom of the enclosure are, for easy cable entry without any tool, equipped with a flexible cable entry per module width of 250 mm.
  - The capacity of the top cable entry is
    - 2 x 32.5 mm
    - 5 x 19 mm
    - 38 x 13.5 mm
  - The capacity of the bottom cable entry is
    - 1 x 50.5 mm
    - 2 x 32.5 mm
    - 2 x 19 mm
    - 28 x 13.5 mm
    - 2 x 11.5 mm
- In the back of the enclosure knockouts are available for easy cable entry from the backside.
- The door is, by one hand, easy removable and adjustable without any tool.

  The opening is reversible without any mechanical reworking.

  The door may be
  - plain
  - or transparent if a visual control function is required.

  Standard closing
  - with a handle without insert
  - with one or three point closing mechanism depending on the height of the enclosure

  The standard handle is replaceable by other inserts and /or handles with or without key.
- The wall-mounting fixation may be
  - outside the enclosure with a set of 4 brackets
  - or inside with screws going trough the backside, protected with plastic covers.
- The enclosure offers maximum protection to the user and equipment thanks to the total insulation ⧈ and the protection degree IP43 IK08, according to IEC 60529, EN 60529 and EN 62262 and IEC 62262.
- The system enclosures comply with the standards EN 60439-1 and IEC 60439-1.
- The enclosures have the KEMA and CEBEC approvals.

QuiXtra™ 630

System Enclosure for Low Voltage distribution boards up to 630A

Conformity to standards
The panels are designed according to the IEC 61439-2 standard. All verification tests and individual tests required by the standard have been done.
Internal separation is Form 1. Form 2 can be achieved, as option.

Technical characteristics
The panel is designed of kit-form enclosures made from sheet steel, which can be stand alone or coupled next to each other, for indoor use.
Each enclosure consists of in a high-strength rear plate, made of galvanized sheet steel 1,5 mm thick, with four aluminum corner parts bolted in each corner. The external panels and the doors are made in epoxy polyester power coating sheetsteel 1,25mm thick. All the external panels (top, bottom and side panels) are fixed, using screws, to the aluminium corner parts. Each one can be disassembled independently from the rest of the external panels.

The sheet steel parts are pre-treated with iron phosphate and protected with epoxy polyester powder-coating RAL 9006, giving a smooth finish. The colour for the external corner parts, the handle and the base is RAL 7024.

The range of QuiXtra 630 consists of 24 different sizes:
- Three external widths: 364, 660 and 876 mm
- Nine heights: external dimensions from 600 up to 2050mm.
- One depth: 220 mm without door and 250 mm with the door
- Useful dimensions:
  - Widths for 12, 24 and 36 modules 18 mm
  - Heights from 450 up to 1800 mm

The DIN rails or mounting plates of the functional units, and the busbar holders are fixed with special "click-in" support, attaching to the vertical profiles which are fixed to the rear panel. QuiXtra 630 allows free accessibility from all sides for the wiring of electrical devices mounted on the DIN rails and mounting plates, fixed to the rear panel on the functional kits.

The functional units, based on a modular concept with a height in steps of 50 mm are available for:
- Modular devices, for 12, 24 and 36 modules of 18 mm. In two different heights, 150 and 200 mm. One special function for screwless MCB's is available.
- Meters
- Push-buttons
- Moulded case circuit breakers. Up to 630A. To mount in horizontal or in vertical position
- Load break switches. Up to 630A. To mount in horizontal or in vertical position.
- Terminals
- Plain mounting plates

Two busbar systems can be mounted in the enclosure:
- Staircase busbar. Developed for easy accessibility during wiring, to the four phases, because the holder shape puts the copper bars at different depths. The staircase busbar can be assembled in vertical position in the 12 module wide enclosure, and in horizontal position in the 24 and 36 module wide enclosure. Electrical devices cannot be mounted in front of a staircase busbar. The busbar holders are fixed to the rear panel using specific "click in" supports and profiles.
- Rear mounted busbar. It Allows the assembly of the copper bars between the rear panel and the electrical devices. The rear busbar can be mounted in vertical or in horizontal position in all types of enclosure. The electrical devices can be mounted in front of the rear busbar in the enclosures 24 and 36 modules wide, except RecordPlus FG and Dilos 3&4.
  A busbar can span multiple coupled enclosures. The busbar holders are fixed to the back plate using specific "click in" supports and profiles
- Vertical and horizontal separation screens allow the upgrade of the internal segregation form to form 2, according the IEC 61439-2

The enclosures can be closed with two types of doors, plain and transparent. The plain door is available for the three enclosure widths and the transparent door is available for the 24 and 36 modules wide enclosures. The locking system is operated by a central handle and consists of a one or a three point locking mechanism, depending on the height of the enclosure. The doors are equipped with a lock insert for a 2432E key. The door can be assembled and disassembled without any tools, and can be opened from the right or the left side of the enclosure. The opening angle is 135°.

The enclosure offers maximum protection to the users and equipment thanks to an IP 43 protection degree with door and IP43 profile, following IEC 60529 and the IEC 62262.

The enclosure has the KEMA approval.

Electrical characteristics
Rated operational voltage: 415V
Rated insulation voltage: 690V
Rated short-circuit current: 30kA /1s
Rated busbar current system: up to 630A
Protection degree: IP43 with door and IP43 profile, IP40 with door and without IP43 profile, IP30 without door
The panel is designed for indoor use only
Ambient temperature: 35°C

Modula Plus

System enclosure for Low Voltage distribution panel from 160A up to 4000A

Conformity to standards
The panels are complying to the standard EN 60439-1
All typetests and individual tests required by the standard have been done.
Internal separation Form 1, Form 2 as option.

Technical characteristics
The panel is designed of kit-form enclosures made from sheet steel, which can be stand alone and coupled next to each other. Each cabinet consists of a strong, welded top and bottom frame to which the vertical uprights are bolted. Top and bottom frame and vertical uprights offer a pattern of rectangular and round holes for easy fixation of functional units, depth profiles and busbars.
They consist of three different compartments, all of them fully accessible from the front.

The busbar compartment
The main busbar is located in the top of the enclosure and is based on flat, rectangular copper provided with holes diameter 11mm for easy coupling and connection of wires and busbars in step of 25mm. Cross section from 63x5mm up to 160x5mm. Center distance 90mm. The bars are provided with a bending at one end to allow easy connection with each other.

The compartment for functional units
The panels are equipped with individual functional units, consisting of mounting plates or mounting frames supporting one or more low voltage devices and covered with metal coverplates to prevent from accidential access to live parts.
- functional units for DIN-rail equipment
- functional units for meters
- functional units for Moulded Case Circuit Breaker from 125 up to 1250A. The devices are mounted fixed in horizontal or vertical position
- functional units for Loadbreak Switches up to 3150A. The devices are mounted fixed in horizontal or vertical position
- functional units for Air Circuit Breakers up to 4000A.

The devices are mounted fixed or withdrawable.
The design of functional units allow quick and easy replacement or modification of the units.

The cable compartment
An integrated cable compartment located at the left or right side of the enclosure guides outgoing cables or contains vertical busbar based on flat, rectangular copper provided with holes diameter 11mm for easy coupling and connection of wires and busbars in step of 25mm. Cross section from 63x5mm up to 160x5mm. Center distance 90mm. The bars are provided with a bending at one end to allow easy connection with each other.
For rated current up to 630A a staircase type of busbar based on flat copper from 20x5mm up to 30x10mm is used for easy interconnection between the busbar and outgoing Low Voltage devices.
The bars are provided with threaded holes M6 or M8 and can be covered by a protective shroud IP20 as option.

Electrical characteristics

Rated operational voltage	690V
Rated insulation voltage	1000V
Rated short-circuit withstand current	70kA / (1s)
Rated current of the busbar system	up to 4000A
Degree of protection	IP55
	IP30
The panel is designed for indoor use	
Ambient temperature	35°

Pedestals

- Polyester floor standing enclosures offer reliable housing for switching, distributing and protective equipment used in underground low voltage and communication networks as well as various kind of outdoor industrial applications.
- The bases are partly buried into the ground, guaranteeing a stable support for the equipped enclosure, and allowing easy and safe cable entry into the enclosure.
- The pedestals feature high protection degrees to protect both equipment and people.
- The enclosures have very high mechanical impact strenght for increased safety during many years.
- The design offers natural ventilation to prevent accumulation of condensation humidity inside the enclosure. Heating and ventilation need to be considered depending on environmental conditions.
- The polyester has a low thermal conductivity, resulting in reduced temperature variations within the enclosure.

The pedestals comply with following standards:
- IEC 60529: IP protection degree against ingress of foreign bodies
- EN 62262 and IEC 62262: IK protection degree against mechanical impact
- IEC 60439-5: Cable distribution cabinets in power networks

EH1

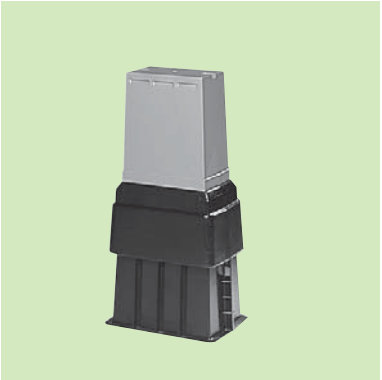

Small pedestal

- Small pedestal: 752 x 385 x 270 mm
- Light weight and easy to install by one person: 4.5 kg
- Sturdy base in HDPE, colour RAL 9005, and rainhood in RAL 7035. made out of glass-fibre reinforced polyester or thermoplastic polymer.
- The rainhood is secured onto the base with two vandal proof zamac screws, alternatively a version with a lock is available.
- The base resists ground temperatures as low as -50°C
- Arrow indicators injected on the base front indicate burial depth and correct positioning.
- A mounting plate is integrated with the base, provided with 3 slots for mounting of devices.
- The ventilated, thermoplastic or polyester hood guarantees a protection degree IP23.
- Alternatively, the base with polyester hood guarantees IP43 and increased thermal stability in tropical temperatures.
- Protection degree IK10 against external mechanical impacts according to EN 62262 and IEC 62262
- Particularly suited for cable television networks. Heating and ventilation need to be considered depending on environmental conditions.

EH2

Column cabinets

- Column cabinets with integrated base:
  - 1097 x 433 x 240 mm
  - 1347 x 433 x 240 mm
  - 1622 x 433 x 240 mm
  - 1896 x 433 x 240 mm
- The base and the rear panel of the column are molded as one part. The base allows for stable installation of the column.
- Enclosure made of hot moulded, glass fibre reinforced polyester in RAL 7035 light grey. Corrosion resistant, UV stabilized for outdoor applications, suitable for use in environments from - 35°C to + 125°C. Temporary exceeding temperatures will not be harmful.
- A labyrinth design guarantees natural ventilation whilst maintaining a good protection degree. The rainhood shape prevents water stagnation on the roof. This guarantees a protection degree IP44 according to IEC 60529.
- The cabinets offer maximum protection to user and equipment: protection degree IK10 against external impacts according to EN 62262 and IEC 62262
- Fully integrated locking clamp, suitable for operation by a half profile cylindric lock. The cylindric lock can be fitted in a recessed lock box, protected by a vandal proof plastic cap.
- Once unlocked, the enclosure can be accessed without tools by removing the frontal lift-off segments completely (not hinged).
- For easy access the roof can be opened, offering an opening angle of 90°.
- Fixing holes for threaded inserts M6 are provided in the rear panel allowing direct mounting of busbars, a frame, a mounting plate or components.
- Particularly suitable for outdoor installation of fused switchgear, 4-pole busbars, etc. Heating and ventilation need to be considered depending on environmental conditions.

EH3/F & EH3/AP

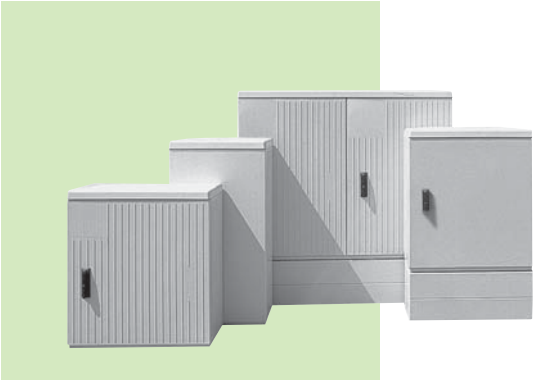

DIN-size pedestals

- Cabinets for DIN-base mounting:
  - 875 x 590 x 320 mm - 1125 x 590 x 320 mm • DIN-size 0
  - 875 x 785 x 320 mm - 1125 x 785 x 320 mm • DIN-size 1
  - 875 x 1115 x 320 mm - 1125 x 1115 x 320 mm • DIN-size 2
  - 875 x 1445 x 320 mm - 1125 x 1445 x 320 mm • DIN-size 3
- Door and rear available with flat surface (Type EH3/F) or with profiled surface (Type EH3/AP anti poster).
- Doors with profiled surface offer a labeling space on the top left corner.
- Supplied with open bottom for cable entry. To be mounted on a basement according to DIN 43629 standard dimensions between the fixation points.
- Both side panels are bolted to the roof and to the rear. The roof is bolted to the rear and the side panels. Horizontal bottom profiles are connected onto the side panels, guaranteeing a structure with high resistance to torsional and bending forces, according to IEC 60439-5.
- For easy cable entry the bottom profile can be easily removed by means of two sliding latches, to be operated without tools.
- The larger enclosures have two doors and two rear panels. The two rear panels are cross-linked with a middle beam. The left door has a doorpost, acting as a blocking profile to the right door.
- Enclosure made of hot moulded, glass fibre reinforced polyester in RAL 7035 light grey. Corrosion resistant, UV stabilized for outdoor applications, suitable for use in environments from - 35°C to + 125°C. Temporary exceeding temperatures will not be harmful.
- A labyrinth design guarantees natural ventilation whilst maintaining a good protection degree. The rainhood shape prevents water stagnation on the roof. This guarantees a protection degree IP44 according to IEC 60529.
- The cabinets offer maximum protection to user and equipment: protection degree IK10 against external impacts according to EN 62262 and IEC 62262.
- Three point locking mechanism, operated by a swing handle designed to receive a half profile cylindric lock. Versions with dual cylinder handle are available as well.
- The door opening angle exceeds 180°.
- The open door can be manually unhinged to allow free access for maintenance. The hinges are made of glassfibre reinforced PA, guaranteeing excellent corrosion resistance.
- Threaded inserts for bolts M8 can be mounted in the rear panel, allowing for direct mounting of busbars, a frame or a mounting plate for components.
- Additional fixation possibilities are foreseen in the side panel to mount horizontal busbars. Thus the usable width on the busbar is maximised.
- For EH3/AP pedestals the profiled door and rear panels make poster sticking difficult and cause poster to drop off.
- Particularly designed for outdoor installation of fused switchgear, 4-pole busbars, telecom jumper frames, etc. Heating and ventilation need to be considered depending on environmental conditions.

EH3/AP-GD

Pedestals with increased depth

- Cabinets with greater depth for base mounting:
  - 875 x 676 x 424 mm
  - 1125 x 676 x 676 mm
  - 875 x 871 x 424 mm
  - 1125 x 871 x 676 mm
  - 875 x 1200 x 424 mm
  - 1125 x 1200 x 676 mm
- Provided with 4 fixing points for floor or base mounting.
- Door and rear profiled surface (anti poster).
  The sides height 875 mm are profiled, whereas the sides height 1125 mm are flat, allowing installation of outgoing power plugs or connectors.
- Supplied with open bottom for cable entry.
- Both side panels are bolted to the roof and to the rear.
  The roof is bolted to the rear and the side panels. Horizontal bottom profiles are bolted onto the side panels, guaranteeing a structure with high resistance to torsional and bending forces, according to IEC 60439-5.
- The larger enclosures have two doors and two rear panels.
  The two rear panels are cross-liked with a middle beam. The left door has a doorpost, acting as a blocking profile to the right door.
- Possibility of pivoting door on side or back.
- Enclosure made of hot moulded, glass fibre reinforced polyester in RAL 7035 light grey. Corrosion resistant, UV stabilized for outdoor applications, suitable for use in environments from - 35°C to + 125°C. Temporary exceeding temperatures will not be harmful.
- Rainhood made of hand lay up glass fibre reinforced polyester with RAL 7035 topcoat.
- A labyrinth design guarantees natural ventilation whilst maintaining a good protection degree. The rainhood shape prevents water stagnation on the roof. This guarantees a protection degree IP43 according to IEC 60529.
- The cabinets offer maximum protection to user and equipment: protection degree IK10 against external impacts according to EN 62262 and IEC 62262
- Three point locking mechanism, operated by a solid, industrial handle. The handle is designed to receive a half profile cylindric lock.
- The open door can be manually unhinged to allow free access for maintenance. The hinges are made of glassfibre reinforced PA, guaranteeing excellent corrosion resistance.
- Particularly designed for all kind of outdoor industrial application, e.g. pump control or waste water treatment.
  Heating and ventilation need to be considered depending on environmental conditions.

EH4

Column cabinets

Column cabinets type EH4 with integrated base:
- 1600 x 395 x 224 mm
- 1600 x 495 x 224 mm
- 1600 x 745 x 224 mm

- The base and the rear panel of the column are separate items, but are delivered assembled together
- Enclosure made of hot moulded, glass fibre reinforced polyester in RAL 7035 light grey. Corrosion resistant, UV stabilized for outdoor applications, suitable for use in environments from -35°C to +125°C.
  Temporary exceeding temperatures will not be harmful.
- A labyrinth design guarantees natural ventilation whilst maintaining a good protection degree. The rainhood shape prevents water stagnation on the roof.
  This guarantees a protection degree IP43 according to IEC 60529.
- The pedestals guarantee Total Insulation
- The cabinets offer maximum protection to user and equipment: protection degree IK10 against external impacts according to EN 62262 and IEC 62262
- A swing handle, suitable for operation by a half profile cylindric lock.
- Door opening angle of 180° is provided
- Fixing holes for threaded inserts M6 are provided in the rear panel allowing direct mounting of busbars, a frame, a mounting plate or components.
- Particularly suitable for outdoor installation of fused switchgear, 4-pole busbars, etc. Heating and ventilation need to be considered depending on environmental conditions.

EH4-S

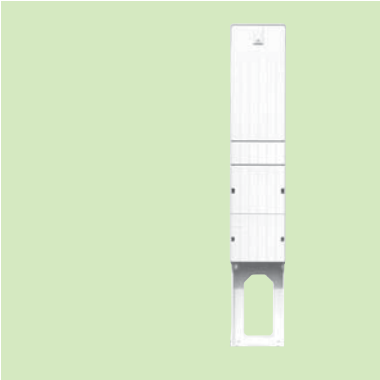

Column cabinets

Column cabinets **EH4-S** with integrated base:
- 1420 x 320 x 234 mm
- 1850 x 320 x 234 mm

- The base and the rear panel of the column are moulded as one part. The base allows for stable installation of the column.
- Enclosure made of hot moulded, glass fibre reinforced polyester in RAL 7035 light grey. Corrosion resistant, UV stabilized for outdoor applications, suitable for use in environments from -35°C to +125°C.
  Temporary exceeding temperatures will not be harmful.
- A labyrinth design guarantees natural ventilation whilst maintaining a good protection degree. The rainhood shape prevents water stagnation on the roof.
  This guarantees a protection degree IP44 according to IEC 60529.
- The cabinets offer maximum protection to user and equipment: protection degree IK10 against external impacts according to EN 62262 and IEC 62262
- Fully integrated locking clamp, suitable for operation by a half profile cylindric lock. The cylindric lock can be fitted in a recessed lock box, protected by a vandal proof plastic cap.
- Once unlocked, the enclosure can be accessed without tools by removing the frontal lift-off segments completely (not hinged).
- The pedestals guarantee total insulation
- Fixing holes for threaded inserts M6 are provided in the rear panel allowing direct mounting of busbars, a frame, a mounting plate or components.
- Particularly suitable for outdoor installation of fused switchgear,4-pole busbars, etc. Heating and ventilation need to be considered depending on environmental conditions.

EH6

Pedestals IP44/54

- Cabinets for base mounting:
  - 830 x 470 x 320 mm • DIN size 00
  - 830 x 590 x 320 mm • DIN size 0
  - 880 x 785 x 320 mm • DIN size 1
- Supplied with open bottom for cable entry. To be mounted on a basement according to DIN 43629 standard dimensions between the fixation points.
- Both side panels are bolted to the roof. The side panels are bolted to the rear. Horizontal bottom profiles cross-link the side panels.
- Enclosure made of hot moulded, glass fibre reinforced polyester in RAL 7035 light grey. Corrosion resistant, UV stabilized for outdoor applications, suitable for use in environments from - 35°C to + 125°C. Temporary exceeding temperatures will not be harmful.
- A labyrinth design guarantees natural ventilation whilst maintaining a good protection degree. The rainhood shape prevents water stagnation on the roof. This guarantees a protection degree IP44 according to IEC 60529.
- The cabinets offer maximum protection to user and equipment: protection degree IK10 against external impacts according to EN 62262 and IEC 62262
- Three point locking mechanism, operated by a recessed, integrated handle or a swing handle. The handle is designed to receive a half profile cylindric lock.
- The open door can be manually unhinged to allow free access for maintenance. The hinges are made of nickled brass, guaranteeing excellent corrosion resistance. The door opening angle exceeds 180°
- Fixation points for self tapping Hilo screws 7,2 x 26 mm are moulded in the rear panel, allowing for direct mounting of busbars, a frame or a mounting plate for components.
- Particularly designed as low cost solution for outdoor installation of fused switchgear, mounting plates, etc. Heating and ventilation need to be considered depending on environmental conditions.

RVS

Pedestals in stainless steel DIN 00 – DIN 4 according to EN 60439-5

- Stainless steel cabinets for outdoor use with a very high and reliable protection level for switchgear, distributors and safety equipment in energy networks, recreation grounds, markets, public events and telecommunications.
- Bases are partially sunken to provide a solid foundation for fitted-out cabinets and to ensure a safe and easy cable input via the removable front plate and sill profile.
- The pedestals meet high safety standards to protect both personnel and equipment.
- The cabinets have very good mechanical properties and a high torsion resistance to ensure many years of optimum protection.
- The cabinets are maintenance-free.

The range of stainless steel pedestals consists of
- Cabinets for base mounting:
- Height 650, 900, 1000, 1150 and 1350 mm
- Depth 355 mm
- Width 460 up to 1780 mm in fixed increments.
- Two compartment designs in different sizes.
- Special dimensions available in consultation.
- Supplied with an open base for cable entry. Must be mounted on a base with standard centre-to-centre measurements according to DIN 43629 or made suitable for wall mounting by wall brackets and baseplate.
- The cabinets are fully welded. This guarantees a structure that is highly resistant to mechanical loads such as torsion and bending according to IEC 60439-5.
- Small cabinets have one door, larger cabinets have a double door with lock on the right-hand door.
- The housing is made of stainless steel AISI 304 according to EN 1.4452 and equipped with polyester surface treatment, standard in RAL 7034. The cabinet is suitable for use in extreme temperatures.
- The design guarantees natural ventilation without infringing the protection value IP43 according to IEC 60529. A polystyrene plate inside the roof panel ensures that moisture is automatically discharged along the vertical sides of the cabinet. The unique base design ensures automatic condensation evacuation.
- Upright and two-door cabinets fitted with a 3-point rod closing mechanism operated by a handle suitable for a profile half-cylinder lock.
- Opened door can be easily removed from the cabinet with a stainless steel hinged rod.
- Guaranteed earthing, independent of corrosion-sensitive transitional surfaces.
- Easy and cheap to recycle.

The enclosure offers maximum protection to the user and equipment thanks to the protection degree IP43 IK 10, according to IEC 60529, EN 60529 and EN 62262 and IEC 62262

The pedestals comply with the standards EN 60439-5 and IEC 60439-5

UC-Cabinet

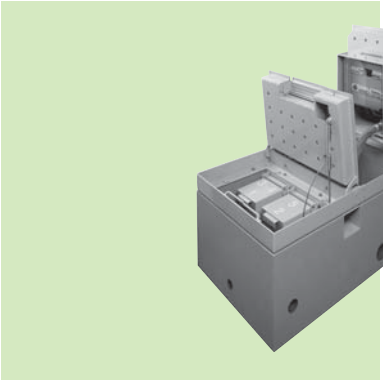

Subterranean enclosures

- Stainless steel enclosures for underground use, with a very high and reliable protection. Suitable for the switching, distribution and safety apparatus used in energy networks, market and event applications and telecommunications.
- The enclosure is sunken integrally. The covers - of stainless steel tear plate or suitable for paving - can be opened by manpower, without tools.
- The UC-Cabinet enclosures meet high safety standards to protect both personnel and equipment.
- The enclosures have excellent mechanical properties, can be used in public areas and offer many years of optimum protection.
- The patented air clock or diving bell principle ensures that components are protected.

The subterranean enclosures comply with following standards:
- IEC 60529: Degrees of protection provided by enclosures (IP code).
- IEC 60439-5: Cable distribution enclosures for power distribution in networks.
- EN 1.4452: Material number
- EN 124: Gully tops and cover tops for vehicular and pedestrian areas

- Enclosures for underground applications.
  - One- and two-compartment designs in various sizes.
  - Where as at the two compartment type there is a split between owner (electrical) compartment and the user compartment.
  - The base is made of polyester enforced concrete.
- The enclosures are fully welded: this guarantees a structure that is very resistant to mechanical loads, such as torsion and bending according to IEC 60439-5.
- The case is made of AISI 304 stainless steel according to EN 1.4452 and is equipped as standard with a surface treatment of polyester paint.
- The cover is standard made of non painted stainless steel tear plate.
- The enclosure is suitable for use in extreme temperatures.
- The cover can be loaded, depending on the design, with 12.5 tons according to EN 124 B125 or 25 tons according to EN 124 C250.
- The protection of the equipment is based on the use of the so-called air clock or diving bell principle (Boyle's law). The protection degree is IP43 according to IEC 60529 for the closed steel structure and IP65 when used in combination with an APO box.
- Locking mechanism suitable for a profile half-cylinder lock.
- Guaranteed earthing, independent of corrosion-sensitive transitional surfaces.

Power dissipation values

According to EN 62208, IEC 62208 and IEC 60890

For each enclosures range

- The 4 or 5 different matrix tables contain all the enclosure **dimensions**.
- The tables are created according to the **positioning** of the enclosure.
- **Two different values** of temperature rise are given depending on the measuring point in the cabinet: **half way** or **on top**.

What is acceptable according to EN 62208, IEC 62208 and IEC 60890

- For common electrical applications, a **temperature rise of 50K** is generally accepted. If the rise is above 50K, a larger enclosure should be chosen. More volume results in a decrease of the temperature rise.
- The **absolute** temperature in °C in the enclosure is **the sum** of the **ambient** temperature in °C and the **temperature rise** in K. According to the standards, the absolute temperature is **max. 70°C**

How to use a matrix?

First choose the right matrix according to the position and the size of the enclosure.
Second calculate the effective power loss in Watt (left column). Add 10-20% to the total effective power loss of the components in order to compensate the small wiring and connections.
Third read in the matrix the temperature rise in the cabinet due to the thermal power dissipation.

Example of an individual enclosure PolySafe 452
(see page I.72)
Enclosure: height = 1000 mm,
width = 1250 mm, depth = 320 mm.
Placed against the wall.
The calculated effective power loss of the components: 600W
Components are placed in the centre of the cabinet.
In the table 'Rear against wall' (see below) read for **600W** and column **'Half': 40K** temperature rise.
With an ambient temperature of 20°C, the absolute temperature around the components will be approximately 20 + 40 = 60°C
If the temperature is too high for the components, then choose a larger cabinet to allow air ventilation.

Example of coupled enclosures PolySafe 452
Enclosure on the **left side**: height 1000, width 1250 mm, depth 320 mm
Enclosure **in the middle**: height 1000, width 1250 mm, depth 320 mm
Enclosure on the **right side**: height 1000, width 1250 mm, depth 320 mm
Placed against the wall
Do the same calculation as above for each individual enclosure.
Find the temperature rise for the **left and right side** enclosure in the table '**Front, left and upperside free**', see page I.73 and find **'Half': 42K**
Find the temperature rise for the **middle** enclosure in the table '**Frontside and upperside free**', see page I.73 and find **'Half': 44K**

Rear against wall (wall mounting)

Temperature rise [Kelvin]

DISSIPATION	PS 220 500x500		PS 230 500x750		PS 320 750x500		PS 330 750x750		PS 340 750x1000		PS 352 750x1250		PS 420 1000x500		PS 430 1000x750		PS 440/442 1000x1000		PS 452 1000x1250		PS 530 1250x750		PS 542/546 1250x1000	
Watt	Half	Top	Half	Top	Half	Top	Half	Top	Half	Top	Half	Top	Half	Top	Half	Top	Half	Top	Half	Top	Half	Top	Half	Top
10	4	5	4	4	4	5																		
20	8	9	7	7	6	8	5	6	4	5			5	7										
30	11	13																						
40	13	16	11	13	11	14	9	11	7	9	6	7	9	13	7	9	5	7	5	6	5	8		
50	16	19																						
60	19	22	16	18	16	19	12	16	10	12	8	10	12	18	10	13	7	10	6	8	8	11	6	8
70	21	25																						
80	23	28	20	23	20	24	15	20	12	16	10	12	16	22	12	16								
90	26	31																						
100	28	33	24	27	23	29	18	23	15	19	12	14	19	27	14	19	11	14	9	12	11	16	9	13
120	32	38	28	31	27	33	21	27					22	31	17	23								
140	37	44	31	35	31	38	24	31	19	24	15	19	25	35	19	26	15	19	12	16	15	21	12	16
160	41	48	35	39	34	42	27	34					27	39	21	28								
180	45	53	38	43	38	46	29	38	24	30	19	23	30	43	23	31	18	23	15	19	18	25	15	20
200	49	58	42	47	41	51	32	41					33	47	25	34								
220	53	63	45	51	44	55	34	44	28	35	22	27	35	50	27	37	21	27	18	23	21	30	18	24
240			48	55	47	58	37	47					38	54	29	39								
260			52	58	51	62	39	51	32	40	25	31	40	58	31	42	24	31	20	26	24	34	20	27
280							42	54					43	61	33	45								
300							44	57	36	45	28	35	45	65	35	47	27	35	23	29	27	38	23	30
350							50	64	40	51	32	40	51	73	40	53	30	39	26	33	31	43	25	34
400									45	57	36	44			44	59	34	44	29	37	34	48	28	38
450									49	62	39	48			48	65	37	48	32	40	38	53	31	42
500											43	53			53	71	40	53	34	44	41	58	34	46
550											46	57					44	57	37	47	45	63	37	49
600											49	61					47	61	40	51	48	67	39	53
650											53	65					50	65	42	54	51	72	42	57
700																			45	57			45	60
750																			48	61			47	63
800																			50	64			50	67

Rear against wall

Temperature rise [Kelvin]

H X W (mm)	MB11 65x65	MB11 65x65	MB21 94x65	MB21 94x65	MB22 94x94	MB22 94x94	MB33 110x110	MB33 110x110	MB42 130x94	MB42 130x94	MB44 130x130	MB44 130x130
Depth (mm)	57	81	57	81	57	81	66	90	57	81	75	99
DISSIPATION Watt	Top	Top	Top	Top	Top	Top	Top	Top	Top	Top	Top	Top
1												
2												
3												
4	45											
5	55	45	45									
6				45								
7	65	55	55		45							
8	75	65	65	55		45			45			
9					55		45					
10		75	75	65	65	55			55	45		
11							55	45				
12				75						55	45	
13					75	65		55	65			
14							65				55	45
15						75		65	75	65	65	55
20							75	75		75	75	65
25												75

Rear against wall

Temperature rise [Kelvin]

H X W (mm)	MB52 180x94	MB52 180x94	MB53 180x110	MB53 180x110	MB53 180x110	MB65 182x180	MB65 182x180	MB65 182x180	MB75 254x180	MB75 254x180	MB75 254x180	MB87 361x254	MB87 361x254
Depth (mm)	57	81	90	111	165	90	111	165	90	111	165	111	165
DISSIPATION Watt	Top	Top	Top	Top	Top	Top	Top	Top	Top	Top	Top	Top	Top
10	45	45											
15	55	55	45										
16	65			45									
17													
18			55										
19	75	65											
20			65	55	45	45							
25		75	75	65	55	55	45		45				
30				75	65	65	55	45	55	45			
35							65	55		55	45		
40					75	75	75		65			45	
45								65	75	65	55		
50								75		75			
55											65	55	45
60													
65											75	65	55
70													
75													
80												75	65
85													
90													
95													
100													75
105													
110													

Rear against wall

Temperature rise [Kelvin]

DISSIPATION	APO 1 185x150x130		APO 31 300x185x175		APO 41 300x300x175		APO 71 370x300x175		APO 51 485x300x175		APO 81 555x300x175		APO 61 600x300x175		APO 11 600x370x175		APO 12 600x600x175	
Watt	Half	Top	Half	Top	Half	Top	Half	Top	Half	Top	Half	Top	Half	Top	Half	Top	Half	Top
5	12	14	7	9	6	7	5	6	4	5	4	5	4	5	3	4	3	3
10	20	25	12	15	10	12	9	11	8	9	7	9	7	8	6	7	4	5
15	28	34	17	21	14	16	12	15	10	13	10	12	9	11	8	10	6	7
20	36	43	22	27	17	20	15	19	13	16	12	15	11	14	10	13	8	9
25	43	52	26	32	21	24	18	22	16	19	14	18	14	17	12	15	9	11
30			30	37	24	28	21	26	18	22	17	21	16	20	14	17	11	13
40			38	47	30	36	27	32	23	28	21	26	20	25	18	22	14	16
50			45	56	36	43	32	39	27	34	25	31	24	30	21	26	16	19
60					42	49	37	45	32	39	29	36	28	34	25	30	19	22
70							42	51	36	44	33	41	31	39	28	34	21	25
80									40	49	37	46	35	43	31	38	24	28
90											40	50	38	48	34	42	26	31
100													42	52	37	46	28	34
110															40	50	31	36
120															43	53	33	39
130																	35	42
140																	37	44
150																	39	47
160																	41	49
170																	45	53

Front, left and upperside free

Temperature rise [Kelvin]

DISSIPATION	APO 1 185x150x130		APO 31 300x185x175		APO 41 300x300x175		APO 71 370x300x175		APO 51 485x300x175		APO 81 555x300x175		APO 61 600x300x175		APO 11 600x370x175		APO 12 600x600x175	
Watt	Half	Top	Half	Top	Half	Top	Half	Top	Half	Top	Half	Top	Half	Top	Half	Top	Half	Top
5	13	15	8	9	6	7	5	6	5	6	4	5	4	5	4	4	3	3
10	22	27	13	16	11	13	9	11	8	10	7	9	7	9	6	8	5	5
15	30	37	18	23	15	18	13	15	11	14	10	13	10	12	9	11	6	8
20	38	46	23	28	19	22	16	19	14	17	13	16	12	15	11	13	8	10
25	46	56	28	34	22	27	19	23	17	21	15	19	15	18	13	16	10	11
30			32	39	26	31	22	27	19	24	18	22	17	21	15	19	11	13
40			40	50	33	39	28	34	24	30	22	28	19	24	19	23	14	17
50					39	46	33	41	29	36	27	33	25	32	23	28	17	20
60					45	54	39	47	34	42	31	39	29	37	26	32	19	23
70							44	53	38	47	35	44	33	42	30	37	22	26
80									42	52	39	49	37	46	33	41	25	29
90											43	53	41	51	36	45	27	32
100															39	49	29	35
110															43	53	32	38
120																	34	40
130																	36	43
140																	39	46
150																	41	48
160																	43	51
170																		

Frontside and upperside free

Temperature rise [Kelvin]

DISSIPATION	APO 1 185x150x130		APO 31 300x185x175		APO 41 300x300x175		APO 71 370x300x175		APO 51 485x300x175		APO 81 555x300x175		APO 61 600x300x175		APO 11 600x370x175		APO 12 600x600x175	
Watt	Half	Top	Half	Top	Half	Top	Half	Top	Half	Top	Half	Top	Half	Top	Half	Top	Half	Top
5	13	16	8	10	7	8	6	7	5	6	5	6	4	5	4	5	3	3
10	24	29	14	18	11	14	10	12	8	10	8	10	7	9	7	8	5	6
15	33	40	20	24	16	19	14	17	12	15	11	14	10	13	9	11	7	8
20	41	50	25	31	20	24	17	21	15	18	14	17	13	16	12	14	8	10
25			30	37	24	28	21	25	18	22	16	20	16	20	14	17	10	12
30			34	42	28	33	24	29	20	25	19	24	18	23	16	20	12	14
40			43	54	35	41	30	37	26	32	24	30	23	29	20	25	15	17
50					42	49	36	44	31	38	29	36	27	34	24	30	17	21
60					48	57	42	51	36	44	33	41	32	39	28	35	20	24
70									40	50	38	47	36	45	32	39	23	27
80											42	52	40	50	35	44	26	30
90															39	48	28	33
100															42	52	31	36
110																	33	39
120																	35	42
130																	38	45
140																	40	48
150																	42	50
160																		
170																		

Frontside free, upper side not free

Temperature rise [Kelvin]

DISSIPATION	APO 1 185x150x130		APO 31 300x185x175		APO 41 300x300x175		APO 71 370x300x175		APO 51 485x300x175		APO 81 555x300x175		APO 61 600x300x175		APO 11 600x370x175		APO 12 600x600x175	
Watt	Half	Top	Half	Top	Half	Top	Half	Top	Half	Top	Half	Top	Half	Top	Half	Top	Half	Top
5	15	18	9	11	7	8	6	8	5	6	5	6	5	6	4	5	3	4
10	25	31	16	19	12	15	11	14	9	11	8	10	8	10	7	9	5	6
15	35	43	22	27	17	21	16	19	13	16	12	14	11	14	10	12	7	9
20	44	54	27	34	22	26	20	24	16	20	15	18	14	17	12	15	9	11
25			33	41	26	31	23	29	19	23	18	22	17	21	15	18	11	13
30			38	47	30	36	27	33	22	27	20	25	19	24	17	21	13	15
40			48	59	38	45	34	42	28	34	26	32	24	30	22	27	16	19
50					46	54	41	50	33	41	31	38	29	36	26	32	19	22
60									38	47	35	44	34	42	30	37	22	26
70									43	54	40	50	38	48	34	42	25	29
80													43	53	38	47	28	33
90															42	51	30	36
100																	33	39
110																	36	42
120																	38	45
130																	41	48
140																	43	51
150																		
160																		
170																		

Rear against wall

Temperature rise [Kelvin]

DISSIPATION	ARIA 32 300x200x170		ARIA 43 400x300x170		ARIA 54 500x400x230		ARIA 64 600x400x230		ARIA 75 700x500x270		ARIA 86 800x600x300		ARIA 108 1000x800x300	
Watt	Half	Top	Half	Top	Half	Top	Half	Top	Half	Top	Half	Top	Half	Top
10	12	15	8	10	6	7	5	6	4	5	3	4	2	3
20	21	26	15	18	10	12	9	11	7	9	6	7	4	5
30	30	36	20	25	14	17	12	15	10	12	8	10	5	7
40	37	46	26	32	17	21	15	19	12	15	10	13	7	9
50	45	55	31	38	21	25	18	22	15	18	12	15	8	11
60			36	44	24	29	21	26	17	21	13	18	9	13
70			41	49	27	33	24	29	19	24	15	20	11	14
80			45	55	30	36	27	33	21	26	17	23	12	16
90					33	40	29	36	23	29	18	25	13	18
100					36	44	32	39	26	31	20	27	14	19
110					39	47	34	42	28	34	22	29	15	21
120					42	50	37	45	30	36	23	31	16	22
130							39	49	32	39	25	33	17	24
140							42	51	33	41	26	35	19	25
150									35	43	28	37	20	26
160									37	46	29	39	21	28
170									39	48	31	41	22	29
180									41	50	32	43	23	31
190											34	45	24	32
200											35	47	25	33
210											37	49	26	35
220											38	51	27	36
230													28	37
240													29	39
250													30	40
260													31	41
270													31	42
280													32	44
290													33	45
300													34	46
310													35	47
320													36	49
330													37	50
340														

Front, left and upperside free

Temperature rise [Kelvin]

DISSIPATION	ARIA 32 300x200x170		ARIA 43 400x300x170		ARIA 54 500x400x230		ARIA 64 600x400x230		ARIA 75 700x500x270		ARIA 86 800x600x300		ARIA 108 1000x800x300	
Watt	Half	Top	Half	Top	Half	Top	Half	Top	Half	Top	Half	Top	Half	Top
10	13	16	9	11	6	7	5	7	4	5	3	4	2	3
20	23	28	16	19	10	13	9	11	7	9	6	8	4	6
30	31	38	22	26	15	18	13	16	10	12	8	11	6	8
40	39	49	27	33	18	22	16	20	13	16	10	13	7	10
50	47	58	32	40	22	27	19	24	15	19	12	16	9	12
60			38	46	25	31	23	28	18	22	14	19	10	13
70			43	52	29	35	26	31	20	24	16	21	11	15
80					32	39	28	35	22	27	18	23	13	17
90					35	43	31	38	24	30	19	26	14	19
100					38	46	34	42	27	33	21	28	15	20
110					41	50	37	45	29	35	23	30	16	22
120							39	48	31	38	24	32	18	23
130							42	52	33	40	26	35	19	25
140									35	43	28	37	20	26
150									37	45	29	39	21	28
160									39	48	31	41	22	29
170									41	50	32	43	23	31
180									43	52	34	45	24	32
190											35	47	26	34
200											37	49	27	35
210											38	51	28	37
220													29	38
230													30	39
240													31	41
250													32	42
260													33	44
270													34	45
280													35	46
290													36	48
300													37	49
310													38	50
320														
330														
340														

Frontside and upperside free

Temperature rise [Kelvin]

DISSIPATION	ARIA 32 300x200x170		ARIA 43 400x300x170		ARIA 54 500x400x230		ARIA 64 600x400x230		ARIA 75 700x500x270		ARIA 86 800x600x300		ARIA 108 1000x800x300	
Watt	Half	Top	Half	Top	Half	Top	Half	Top	Half	Top	Half	Top	Half	Top
10	14	17	9	11	6	8	6	7	4	5	4	5	3	3
20	24	30	16	20	11	14	10	12	8	9	7	8	4	6
30	33	41	23	28	16	19	14	17	11	13	9	11	6	8
40	42	52	29	35	20	24	17	22	13	16	11	14	8	10
50			34	42	23	29	21	26	16	20	14	17	9	12
60			40	48	27	33	24	30	18	23	16	19	11	14
70			45	55	31	37	27	34	21	26	18	22	12	16
80					34	42	31	38	23	29	20	24	14	18
90					38	46	34	41	26	31	22	27	15	19
100					41	50	36	45	28	34	24	29	16	21
110							39	49	30	37	26	31	18	23
120							42	52	32	40	27	34	19	24
130									34	42	29	36	20	26
140									37	45	31	38	21	27
150									39	47	33	40	23	29
160									41	50	35	42	24	31
170											36	44	25	32
180											38	47	26	34
190											40	49	27	35
200											41	51	29	37
210													30	38
220													31	40
230													32	41
240													33	42
250													34	44
260													35	45
270													36	47
280													37	48
290													39	49
300													40	51
310														
320														
330														
340														

Frontside free, upper side not free

Temperature rise [Kelvin]

DISSIPATION	ARIA 32 300x200x170		ARIA 43 400x300x170		ARIA 54 500x400x230		ARIA 64 600x400x230		ARIA 75 700x500x270		ARIA 86 800x600x300		ARIA 108 1000x800x300	
Watt	Half	Top	Half	Top	Half	Top	Half	Top	Half	Top	Half	Top	Half	Top
10	15	19	11	13	7	9	6	8	5	6	4	5	3	4
20	27	33	19	23	12	15	11	14	8	10	7	8	5	6
30	37	46	26	32	17	21	15	19	11	14	10	12	7	9
40	47	57	33	40	22	26	19	24	14	18	12	15	9	11
50			39	48	26	32	23	28	17	21	14	18	10	14
60			45	56	30	37	27	33	20	24	17	21	12	16
70					34	41	30	37	23	28	19	23	13	18
80					38	46	33	41	25	31	21	26	15	20
90					42	51	37	45	28	34	23	28	16	22
100							40	49	30	37	25	31	18	24
110									32	40	27	33	19	26
120									35	43	29	36	21	27
130									37	45	31	38	22	29
140									39	48	33	41	23	31
150									42	51	35	43	25	33
160											37	45	26	35
170											39	47	27	36
180											41	50	29	38
190													30	40
200													31	41
210													32	43
220													34	45
230													35	46
240													36	48
250													37	49
260													39	51
270														
280														
290														
300														
310														
320														
330														
340														

Rear against wall (wall mounting)

Temperature rise [Kelvin]

DISSIPATION	PS 220 500x500		PS 230 500x750		PS 320 750x500		PS 330 750x750		PS 340 750x1000		PS 352 750x1250		PS 420 1000x500		PS 430 1000x750		PS 440/442 1000x1000		PS 452 1000x1250		PS 530 1250x750		PS 542/546 1250x1000	
Watt	Half	Top	Half	Top	Half	Top	Half	Top	Half	Top	Half	Top	Half	Top	Half	Top	Half	Top	Half	Top	Half	Top	Half	Top
10	4	5	4	4	4	5																		
20	8	9	7	7	6	8	5	6	4	5			5	7										
30	11	13																						
40	13	16	11	13	11	14	9	11	7	9	6	7	9	13	7	9	5	7	5	6	5	8		
50	16	19																						
60	19	22	16	18	16	19	12	16	10	12	8	10	12	18	10	13	7	10	6	8	8	11	6	8
70	21	25																						
80	23	28	20	23	20	24	15	20	12	16	10	12	16	22	12	16								
90	26	31																						
100	28	33	24	27	23	29	18	23	15	19	12	14	19	27	14	19	11	14	9	12	11	16	9	13
120	32	38	28	31	27	33	21	27					22	31	17	23								
140	37	44	31	35	31	38	24	31	19	24	15	19	25	35	19	26	15	19	12	16	15	21	12	16
160	41	48	35	39	34	42	27	34					27	39	21	28								
180	45	53	38	43	38	46	29	38	24	30	19	23	30	43	23	31	18	23	15	19	18	25	15	20
200	49	58	42	47	41	51	32	41					33	47	25	34								
220	53	63	45	51	44	55	34	44	28	35	22	27	35	50	27	37	21	27	18	23	21	30	18	24
240			48	55	47	58	37	47					38	54	29	39								
260			52	58	51	62	39	51	32	40	25	31	40	58	31	42	24	31	20	26	24	34	20	27
280							42	54					43	61	33	45								
300							44	57	36	45	28	35	45	65	35	47	27	35	23	29	27	38	23	30
350							50	64	40	51	32	40	51	73	40	53	30	39	26	33	31	43	25	34
400									45	57	36	44			44	59	34	44	29	37	34	48	28	38
450									49	62	39	48			48	65	37	48	32	40	38	53	31	42
500											43	53			53	71	40	53	34	44	41	58	34	46
550											46	57					44	57	37	47	45	63	37	49
600											49	61					47	61	40	51	48	67	39	53
650											53	65					50	65	42	54	51	72	42	57
700																			45	57			45	60
750																			48	61			47	63
800																			50	64			50	67

Front, left and upperside free

Temperature rise [Kelvin]

DISSIPATION	PS 220 500x500		PS 230 500x750		PS 320 750x500		PS 330 750x750		PS 340 750x1000		PS 352 750x1250		PS 420 1000x500		PS 430 1000x750		PS 440/442 1000x1000		PS 452 1000x1250		PS 530 1250x750		PS 542/546 1250x1000	
Watt	Half	Top	Half	Top	Half	Top	Half	Top	Half	Top	Half	Top	Half	Top	Half	Top	Half	Top	Half	Top	Half	Top	Half	Top
10	4	5	4	4	4	5																		
20	8	10	7	8	7	8	5	7	4	5			5	8	4	6								
30	11	13	9	11	9	12																		
40	14	17	12	13	12	15	9	12	7	9	6	7	10	13	7	10	6	7	5	6	6	8	5	6
50	17	20	14	16	14	17																		
60	19	23	16	19	16	20	13	16	10	13	8	10	13	19	10	14	8	10	7	8	8	11	7	9
70	22	26	19	21	19	23																		
80	25	29	21	23	21	25	16	20	13	16	10	13	17	23	13	17	10	13	8	10	10	14	8	11
90	27	32	23	26	23	28																		
100	29	35	25	28	25	30	19	24	16	19	12	15	20	28	16	21	12	15	10	12	12	17	10	13
120	34	40	29	32	29	35	22	28	18	22			23	32	18	24								
140	39	46	32	37	32	40	25	32	20	25	16	20	26	37	20	27	15	20	13	16	16	22	13	17
160	43	51	36	41	36	44	28	35	23	28			29	41	23	30								
180	47	56	40	45	40	49	31	39	25	31	20	24	32	45	25	33	19	24	16	20	20	27	16	21
200	51	61	43	49	43	53	33	42	27	34			35	49	27	36								
220			47	53	47	57	36	46	29	36	23	28	38	53	29	39	22	28	19	23	23	32	19	25
240			50	56	50	62	39	49	32	39			40	57	32	42								
260							41	52	34	42	27	32	43	60	34	45	25	32	21	27	27	37	21	28
280							44	55	36	44			46	64	36	47								
300							46	58	38	47	30	36	48	68	38	50	28	36	24	30	30	41	24	32
350							52	66	43	53	34	41	55	77	43	57	32	41	27	34	34	47	27	36
400									48	59	38	46			48	63	36	46	30	38	38	52	30	40
450									52	65	41	50			52	69	39	50	33	41	41	57	33	44
500											45	55					43	55	36	45	45	62	36	48
550											49	59					46	59	39	49	49	67	39	52
600											52	63					50	63	42	52	52	72	42	55
650																			45	56			45	59
700																			47	59			47	63
750																			50	62			50	66

Frontside and upperside free

Temperature rise [Kelvin]

DISSIPATION	PS 220 500x500		PS 230 500x750		PS 320 750x500		PS 330 750x750		PS 340 750x1000		PS 352 750x1250		PS 420 1000x500		PS 430 1000x750		PS 440/442 1000x1000		PS 452 1000x1250		PS 530 1250x750		PS 542/546 1250x1000	
Watt	Half	Top	Half	Top	Half	Top	Half	Top	Half	Top	Half	Top	Half	Top	Half	Top	Half	Top	Half	Top	Half	Top	Half	Top
10	5	6	4	5	4	5																		
20	9	10	7	8	7	9	5	7	5	5			6	8	5	6								
30	12	14	10	11	10	12																		
40	15	18	12	14	12	15	10	12	8	9	6	7	11	13	8	10	6	7	5	6	7	9	5	6
50	18	21	15	17	15	18																		
60	21	25	17	19	17	21	13	16	11	13	9	10	15	19	11	14	8	10	7	8	9	12	7	9
70	23	28	19	22	19	24																		
80	26	31	21	24	22	27	17	20	14	16	11	13	19	23	14	18	11	13	9	11	11	15	9	11
90	29	34	23	26	24	29																		
100	31	37	26	29	26	32	20	25	17	20	13	15	23	28	17	22	13	16	10	13	14	18	11	14
120	36	43	30	33	30	37	23	28	19	23			26	33	19	25	15	18						
140	41	49	33	38	34	42	26	32	22	26	17	20	30	37	22	28	17	21	14	16	18	24	14	18
160	46	54	37	42	38	47	29	36	24	29			33	41	25	31	18	23						
180	50	59	41	46	42	51	32	39	27	32	21	25	36	45	27	35	20	25	17	20	22	29	17	22
200			45	50	45	56	35	43	29	34			39	49	29	38	22	27						
220			48	54	49	60	38	46	31	37	25	29	42	53	32	41	24	29	20	24	26	35	20	26
240			52	58	52	65	41	50	33	40			46	57										
260							43	53	36	42	28	33	49	61	36	46	27	34	22	27	29	40	23	29
280							46	56	38	45			52	64										
300							48	59	40	48	32	37			41	52	31	38	25	30	33	44	24	33
350							55	67	45	54	36	42			46	59	35	43	28	34	37	50	26	37
400									50	60	40	47			51	66	39	48	32	38	42	56	29	41
450											44	52					42	52	35	42	46	61	32	45
500											48	56					46	57	38	46	50	67	38	49
550											52	61					50	62	41	50			42	53
600																			44	53			45	57
650																			47	57			47	61
700																			50	60			50	65

Frontside free, upperside not free

Temperature rise [Kelvin]

DISSIPATION	PS 220 500x500		PS 230 500x750		PS 320 750x500		PS 330 750x750		PS 340 750x1000		PS 352 750x1250		PS 420 1000x500		PS 430 1000x750		PS 440/442 1000x1000		PS 452 1000x1250		PS 530 1250x750		PS 542/546 1250x1000	
Watt	Half	Top	Half	Top	Half	Top	Half	Top	Half	Top	Half	Top	Half	Top	Half	Top	Half	Top	Half	Top	Half	Top	Half	Top
10	6	7	4	5	4	5							4	5										
20	10	12	8	9	8	9	6	8	5	6	4	5	7	8	5	7					4	6		
30	14	16	11	12	11	13							9	11										
40	17	20	13	15	13	16	11	13	9	11	7	9	12	14	9	12	7	9	5	7	7	10	5	7
50	20	24	16	18	16	20							14	17										
60	24	28	19	21	18	23	15	18	12	15	10	13	16	20	12	16	10	12	8	9	10	14	7	10
70	27	32	21	24	21	26																		
80	30	35	24	27	23	28	19	23	16	19	13	16	20	25	15	20	12	16	10	12	13	18	9	13
90	33	39	26	29	25	31																		
100	36	42	28	32	28	34	23	28	19	23	16	19	24	30	18	24	15	19	11	14	15	21	11	15
120	41	49	33	37	32	39	27	32	22	27	18	22	28	35	21	28					18	24		
140	47	55	37	42	36	45	31	36	24	30	21	25	32	39	24	32	19	25	15	19	20	28	15	20
160	52	62	41	46	40	50	34	40	27	33	23	28	35	44	27	35					22	31		
180			45	51	44	55	37	44	30	37	25	30	39	48	29	39	23	30	18	23	24	34	18	24
200			49	55	48	60	41	48	32	40	27	33	42	53	32	42								
220			53	60	52	64	44	52	35	43	30	36	46	57	35	46	28	35	22	27	29	40	21	28
240							47	56	38	46	32	38	49	61	37	49								
260							50	60	40	49	34	41	52	65	40	52	32	40	25	31	33	45	24	32
280									43	52	36	43			42	56								
300									45	55	38	46			44	59	35	45	28	34	37	51	27	36
350									51	63	43	52			50	66	40	51	31	39	42	58	31	41
400											48	58					45	57	35	43	46	64	34	46
450											52	64					49	63	38	48	51	70	38	50
500																	53	68	42	52			41	55
550																			45	56			44	59
600																			48	60			48	63
650																			51	64			51	67

Stand alone

Temperature rise [Kelvin]

DISSIPATION	PS 220 500x500		PS 230 500x750		PS 320 750x500		PS 330 750x750		PS 340 750x1000		PS 352 750x1250		PS 420 1000x500		PS 430 1000x750		PS 440/442 1000x1000		PS 452 1000x1250		PS 530 1250x750		PS 542/546 1250x1000	
Watt	Half	Top	Half	Top	Half	Top	Half	Top	Half	Top	Half	Top	Half	Top	Half	Top	Half	Top	Half	Top	Half	Top	Half	Top
20	7	9	6	7	6	8	4	6					5	7										
40	13	15	10	13	10	13	8	10	6	8	5	6	8	12	6	8	5	6	4	5	5	7		
60	17	21	14	17	14	19	11	14					11	16	8	11								
80	22	26	17	22	17	23	13	18	10	13	9	11	14	21	10	14	8	11	7	9	8	12	7	9
100	26	31	21	26	20	28	16	21					17	25	12	16								
120	30	36	24	30	24	33	19	25	14	18	12	15	20	28	14	19	11	15	9	12	12	17	9	13
140	34	41	27	34	27	37	21	28					22	32	16	22								
160	38	46	30	38	30	41	24	31	18	23	15	19	25	36	17	24	14	19	12	15	15	21	12	16
180	42	50	33	42	33	45	26	34					27	39	19	26								
200	46	55	36	46	36	49	28	37	21	27	18	23	29	43	21	29	17	22	14	18	17	25	14	19
220	50	59	39	50	38	53	30	40					32	46	23	31								
250			43	55	43	59	34	45	25	33	21	27	35	51	25	34	20	27	17	22	21	30	17	23
300			50	64	49	68	39	52	29	38	25	31	41	59	29	40	23	31	19	25	24	34	19	27
350							44	58	33	43	28	36	46	67	33	45	26	35	22	29	27	39	22	30
400							49	65	37	48	31	40	51	75	36	50	29	39	24	32	30	43	24	34
450							54	71	41	53	34	43			40	55	32	43	27	35	33	48	27	37
500									44	57	37	47			44	60	35	47	29	38	36	52	29	40
550									48	62	40	51			47	65	38	51	32	41	39	56	31	43
600									51	66	43	55			50	69	41	54	34	44	42	60	34	46
700											49	62					46	61	38	50	48	68	38	53
800											54	69					51	68	43	56	53	76	42	58
900																			47	61			47	64
1000																			51	67			51	70

Rear against wall (wall mounting)

Temperature rise [Kelvin]

DISSIPATION	VMS 32 320x220x180		VMS 32 320x220x255		VMS 33 320x320x180		VMS 33 320x320x255		VMS 43 440x320x180		VMS 43 440x320x255		VMS 63 640x320x180		VMS 63 640x320x255		VMS 64 640x440x180		VMS 64 640x440x255	
Watt	Half	Top	Half	Top	Half	Top	Half	Top	Half	Top	Half	Top	Half	Top	Half	Top	Half	Top	Half	Top
10	11	14	9	11	9	11	8	9	8	9	7	8	6	7	5	6	5	6	4	5
20	20	24	16	20	16	19	14	16	13	16	11	14	10	13	9	11	9	11	8	10
30	27	33	22	27	22	26	19	23	18	23	16	19	14	18	12	15	12	15	11	13
40	34	42	28	34	28	33	24	28	23	28	20	24	18	23	16	19	15	19	14	17
50	41	50	33	41	33	39	29	34	28	34	24	29	22	27	19	23	18	22	16	20
60	47		38	47	38	45	33	39	32	39	28	34	25	31	22	27	21	26	19	23
70	54		43	53	43	51	38	45	36	45	31	38	28	36	24	30	24	29	21	26
80			48		48		42	50	41	50	35	43	32	40	27	34	27	33	24	29
90			53		53		46	55	45	55	38	47	35	43	30	37	29	36	26	32
100							50		49		42	51	38	47	33	41	32	39	28	35
120									56		48		44	55	38	47	37	45	33	40
140											55		50		43	53	42	51	37	46
160													55		47		47		41	51
180															52		51		45	56
200															57		56		49	
220																			53	

Front, right and upperside free

Temperature rise [Kelvin]

DISSIPATION	VMS 32 320x220x180		VMS 32 320x220x255		VMS 33 320x320x180		VMS 33 320x320x255		VMS 43 440x320x180		VMS 43 440x320x255		VMS 63 640x320x180		VMS 63 640x320x255		VMS 64 640x440x180		VMS 64 640x440x255	
Watt	Half	Top	Half	Top	Half	Top	Half	Top	Half	Top	Half	Top	Half	Top	Half	Top	Half	Top	Half	Top
10	12	15	10	12	9	11	8	10	8	10	7	9	6	8	6	7	5	6	5	6
20	21	26	17	21	16	20	15	17	14	17	12	15	11	14	10	12	9	11	8	10
30	29	35	24	30	23	27	20	24	20	24	17	21	15	19	13	17	13	16	11	14
40	36	45	30	37	29	34	25	30	25	30	21	26	19	24	17	21	16	20	14	18
50	43	53	36	45	34	41	30	36	29	36	26	31	23	29	20	25	19	24	17	21
60	50		42	52	40	47	35	42	34	42	30	36	27	34	23	29	22	27	20	24
70	57		48		45	54	40	47	39	47	34	41	31	38	26	33	25	31	22	28
80			53		50		44	53	43	53	37	46	34	42	29	37	28	35	25	31
90					55		49		47		41	50	37	47	32	40	31	38	27	34
100							53		51		45	55	41	51	35	44	34	41	30	37
120											52		47		41	51	39	48	35	43
140													53		46		44	54	39	48
160															51		49		44	54
180															57		54		48	
200																			52	
220																			56	

Frontside and upperside free

Temperature rise [Kelvin]

DISSIPATION	VMS 32 320x220x180		VMS 32 320x220x255		VMS 33 320x320x180		VMS 33 320x320x255		VMS 43 440x320x180		VMS 43 440x320x255		VMS 63 640x320x180		VMS 63 640x320x255		VMS 64 640x440x180		VMS 64 640x440x255	
Watt	Half	Top	Half	Top	Half	Top	Half	Top	Half	Top	Half	Top	Half	Top	Half	Top	Half	Top	Half	Top
10	13	16	11	14	10	12	9	10	9	10	8	9	7	9	6	8	6	7	5	6
20	22	27	20	24	18	22	15	18	15	18	13	16	12	15	11	13	10	12	9	11
30	31	37	27	33	25	30	21	25	21	25	18	22	17	21	15	18	14	17	12	15
40	38	47	34	42	32	38	27	32	26	32	23	28	21	26	18	23	17	21	15	19
50	46	57	41	50	38	45	32	38	31	38	28	34	25	31	22	28	20	25	18	22
60	53		47		44	52	37	44	36	44	32	39	29	36	26	32	24	29	21	26
70			53		50		42	50	41	50	36	44	33	41	29	36	27	33	24	29
80					55		47	56	46	56	40	49	37	46	32	40	30	37	27	33
90							52		50		44	54	40	50	35	44	33	40	29	36
100							56		54		48		44	55	39	48	36	44	32	39
120											56		51		45	56	41	51	37	45
140															51		47		42	51
160															56		52		46	
180																			51	

Frontside free, upperside not free

Temperature rise [Kelvin]

DISSIPATION	VMS 32 320x220x180		VMS 32 320x220x255		VMS 33 320x320x180		VMS 33 320x320x255		VMS 43 440x320x180		VMS 43 440x320x255		VMS 63 640x320x180		VMS 63 640x320x255		VMS 64 640x440x180		VMS 64 640x440x255	
Watt	Half	Top	Half	Top	Half	Top	Half	Top	Half	Top	Half	Top	Half	Top	Half	Top	Half	Top	Half	Top
10	14	17	12	15	12	14	10	12	9	11	8	10	7	9	7	8	6	7	5	7
20	24	30	22	27	20	24	18	22	16	20	15	18	13	16	12	14	11	13	10	12
30	33	41	30	37	28	34	25	30	22	27	20	25	18	22	16	20	15	18	13	16
40	42	52	38	46	36	42	32	38	28	34	26	31	22	28	20	25	18	23	17	21
50	50		45	55	43	51	38	45	34	41	31	38	27	33	24	30	22	27	20	25
60			52		49		44	52	39	48	35	43	31	39	28	35	26	31	23	28
70					56		50		44	54	40	49	35	44	32	39	29	36	26	32
80							55		49		45	55	39	49	35	44	32	40	29	36
90									54		49		43	54	39	48	35	43	32	39
100											54		47		42	52	39	47	35	43
120													54		49		45	55	40	50
140															55		50		46	56
160																	56		51	
180																			56	

Enclosures depth = 210 mm

Rear against wall (wall mounting)

Temperature rise [Kelvin]

DISSIPATION	650 x 300		650 x 550		800 x 300		800 x 550		950 x 550	
Watt	Half	Top	Half	Top	Half	Top	Half	Top	Half	Top
25	12	15	9	11	10	13	8	10	7	10
50	21	26	16	19	18	23	14	17	12	18
75	29	36	22	26	25	31	20	24	17	25
100	36	45	27	33	31	39	25	30	21	32
125	43	54	32	39	38	47	30	36	25	38
150	50	>55	38	45	44	55	34	42	29	44
175			43	51	49	>55	39	48	33	49
200			47	>55	55	>55	43	53	37	>55
225			52	>55			48	>55	41	>55
250							52	>55	44	>55
275									48	>55
300									51	>55
325									55	>55

Front, left and top free

Temperature rise [Kelvin]

DISSIPATION	650 x 300		650 x 550		800 x 300		800 x 550		950 x 550	
Watt	Half	Top	Half	Top	Half	Top	Half	Top	Half	Top
25	13	16	9	11	11	14	8	10	8	10
50	22	28	16	19	19	24	15	18	14	17
75	31	39	22	27	27	34	20	25	19	23
100	39	49	28	34	34	43	26	31	24	29
125	47	>55	34	41	41	51	31	38	28	35
150	54	>55	39	47	47	>55	35	44	33	41
175			44	53	53	>55	40	49	37	46
200			49	>55			45	55	41	51
225			54	>55			49	>55	45	>55
250							54	>55	49	>55
275									53	>55

Front and top free

Temperature rise [Kelvin]

DISSIPATION	650 x 300		650 x 550		800 x 300		800 x 550		950 x 550	
Watt	Half	Top	Half	Top	Half	Top	Half	Top	Half	Top
25	14	16	10	12	12	15	9	11	8	10
50	24	31	17	20	21	27	15	19	14	17
75	34	42	23	28	29	37	21	26	20	24
100	53	53	29	36	37	46	27	33	25	31
125	51	>55	35	43	44	>55	32	39	29	37
150			41	49	51	>55	37	45	34	42
175			46	>55			42	51	39	48
200			51	>55			46	>55	43	53
225							51	>55	47	>55
250									51	>55

Enclosure 12 modules

According IEC 60890, temperature rise in Kelvin

Rear against wall - external dimensions

Watt	750x364x250 12 mod./4 row.		900x364x250 12 mod./5 row.		1050x364x250 12 mod./6 row.		1200x364x250 12 mod./7 row.		1350x364x250 12 mod./8 row.		1500x364x250 12 mod./9 row.		1650x364x250 12 mod./10 row.		1950x364x250 12 mod./12 row.	
	Half	Top	Half	Top	Half	Top	Half	Top	Half	Top	Half	Top	Half	Top	Half	Top
10	5	6	4	6	*	*	*	*	*	*	*	*	*	*	*	*
20	9	11	8	10	*	*	*	*	*	*	*	*	*	*	*	*
30	12	15	11	13	*	*	*	*	*	*	*	*	*	*	*	*
40	15	19	13	17	*	*	*	*	*	*	*	*	*	*	*	*
50	18	23	16	20	*	*	*	*	*	*	*	*	*	*	*	*
60	21	26	19	23	*	*	*	*	*	*	*	*	*	*	*	*
70	24	29	21	27	*	*	*	*	*	*	*	*	*	*	*	*
80	26	33	24	30	*	*	*	*	*	*	*	*	*	*	*	*
90	29	36	26	32	*	*	*	*	*	*	*	*	*	*	*	*
100	31	39	28	35	*	*	*	*	*	*	*	*	*	*	*	*
110	34	42	30	38	*	*	*	*	*	*	*	*	*	*	*	*
120	36	45	33	41	*	*	*	*	*	*	*	*	*	*	*	*
130	39	49	35	44	*	*	*	*	*	*	*	*	*	*	*	*
140	41	52	37	46	*	*	*	*	*	*	*	*	*	*	*	*
150	44	54	39	49	*	*	*	*	*	*	*	*	*	*	*	*
160	46	57	41	52	*	*	*	*	*	*	*	*	*	*	*	*
170	48	60	43	54	*	*	*	*	*	*	*	*	*	*	*	*
180	50	63	45	57	*	*	*	*	*	*	*	*	*	*	*	*
190	53	66	47	59	*	*	*	*	*	*	*	*	*	*	*	*
200	55	69	49	62	*	*	*	*	*	*	*	*	*	*	*	*
210	57	71	51	64	*	*	*	*	*	*	*	*	*	*	*	*
220	-	-	53	67	*	*	*	*	*	*	*	*	*	*	*	*
230	-	-	55	69	*	*	*	*	*	*	*	*	*	*	*	*
240	-	-	57	71	*	*	*	*	*	*	*	*	*	*	*	*
250	-	-	-	-	*	*	*	*	*	*	*	*	*	*	*	*

Front and one side free - external dimensions

Watt	750x364x250 12 Mod/4Row		900x364x250 12 Mod/5Row		1050x364x250 12 Mod/6Row		1200x364x250 12 Mod/7Row		1350x364x250 12 Mod/8Row		1500x364x250 12 Mod/9Row		1650x364x250 12 Mod/10Row		1950x364x250 12 Mod/12Row	
	Half	Top	Half	Top	Half	Top	Half	Top	Half	Top	Half	Top	Half	Top	Half	Top
10	5	7	5	6	*	*	*	*	*	*	*	*	*	*	*	*
20	9	11	8	10	*	*	*	*	*	*	*	*	*	*	*	*
30	13	16	11	14	*	*	*	*	*	*	*	*	*	*	*	*
40	16	20	14	18	*	*	*	*	*	*	*	*	*	*	*	*
50	19	24	17	21	*	*	*	*	*	*	*	*	*	*	*	*
60	22	28	20	25	*	*	*	*	*	*	*	*	*	*	*	*
70	25	31	22	28	*	*	*	*	*	*	*	*	*	*	*	*
80	28	35	25	31	*	*	*	*	*	*	*	*	*	*	*	*
90	31	38	27	34	*	*	*	*	*	*	*	*	*	*	*	*
100	33	42	30	37	*	*	*	*	*	*	*	*	*	*	*	*
110	36	45	32	40	*	*	*	*	*	*	*	*	*	*	*	*
120	39	48	34	43	*	*	*	*	*	*	*	*	*	*	*	*
130	41	52	37	46	*	*	*	*	*	*	*	*	*	*	*	*
140	44	55	39	49	*	*	*	*	*	*	*	*	*	*	*	*
150	46	58	41	52	*	*	*	*	*	*	*	*	*	*	*	*
160	49	61	43	54	*	*	*	*	*	*	*	*	*	*	*	*
170	51	64	46	57	*	*	*	*	*	*	*	*	*	*	*	*
180	54	67	48	60	*	*	*	*	*	*	*	*	*	*	*	*
190	56	70	50	62	*	*	*	*	*	*	*	*	*	*	*	*
200	-	-	52	65	*	*	*	*	*	*	*	*	*	*	*	*
210	-	-	54	68	*	*	*	*	*	*	*	*	*	*	*	*
220	-	-	56	70	*	*	*	*	*	*	*	*	*	*	*	*
230	-	-	-	-	*	*	*	*	*	*	*	*	*	*	*	*
240	-	-	-	-	*	*	*	*	*	*	*	*	*	*	*	*
250	-	-	-	-	*	*	*	*	*	*	*	*	*	*	*	*

Front side free - external dimensions

Watt	750x364x250 12 Mod/4Row		900x364x250 12 Mod/5Row		1050x364x250 12 Mod/6Row		1200x364x250 12 Mod/7Row		1350x364x250 12 Mod/8Row		1500x364x250 12 Mod/9Row		1650x364x250 12 Mod/10Row		1950x364x250 12 Mod/12Row	
	Half	Top	Half	Top	Half	Top	Half	Top	Half	Top	Half	Top	Half	Top	Half	Top
10	6	7	5	6	*	*	*	*	*	*	*	*	*	*	*	*
20	10	12	9	11	*	*	*	*	*	*	*	*	*	*	*	*
30	14	17	12	15	*	*	*	*	*	*	*	*	*	*	*	*
40	17	21	15	19	*	*	*	*	*	*	*	*	*	*	*	*
50	21	26	18	23	*	*	*	*	*	*	*	*	*	*	*	*
60	24	30	21	26	*	*	*	*	*	*	*	*	*	*	*	*
70	27	34	24	30	*	*	*	*	*	*	*	*	*	*	*	*
80	30	37	26	33	*	*	*	*	*	*	*	*	*	*	*	*
90	33	41	29	37	*	*	*	*	*	*	*	*	*	*	*	*
100	36	45	32	40	*	*	*	*	*	*	*	*	*	*	*	*
110	39	48	34	43	*	*	*	*	*	*	*	*	*	*	*	*
120	42	52	37	46	*	*	*	*	*	*	*	*	*	*	*	*
130	44	55	39	49	*	*	*	*	*	*	*	*	*	*	*	*
140	47	59	42	52	*	*	*	*	*	*	*	*	*	*	*	*
150	50	62	44	55	*	*	*	*	*	*	*	*	*	*	*	*
160	52	65	46	58	*	*	*	*	*	*	*	*	*	*	*	*
170	55	69	49	61	*	*	*	*	*	*	*	*	*	*	*	*
180	58	72	51	64	*	*	*	*	*	*	*	*	*	*	*	*
190	-	-	53	67	*	*	*	*	*	*	*	*	*	*	*	*
200	-	-	55	69	*	*	*	*	*	*	*	*	*	*	*	*
210	-	-	58	72	*	*	*	*	*	*	*	*	*	*	*	*
220	-	-	-	-	*	*	*	*	*	*	*	*	*	*	*	*
230	-	-	-	-	*	*	*	*	*	*	*	*	*	*	*	*
240	-	-	-	-	*	*	*	*	*	*	*	*	*	*	*	*
250	-	-	-	-	*	*	*	*	*	*	*	*	*	*	*	*

* not available

Enclosure 24 modules

According IEC 60890, temperature rise in Kelvin

Rear against wall - external dimensions

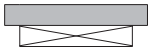

Watt	600x660x250 24 Mod/3Row		750x660x250 24 Mod/4Row		900x660x250 24 Mod/5Row		1050x660x250 24 Mod/6Row		1200x660x250 24 Mod/7Row		1350x660x250 24 Mod/8Row		1500x660x250 24 Mod/9Row		1650x660x250 24 Mod/10Row		1950x660x250 24 Mod/12Row	
	Half	Top	Half	Top	Half	Top	Half	Top	Half	Top	Half	Top	Half	Top	Half	Top	Half	Top
10	4	5	4	5	3	5	3	4	3	4	2	4	*	*	*	*	*	*
20	7	9	7	8	6	8	5	8	5	7	4	7	*	*	*	*	*	*
30	10	12	9	11	8	11	7	11	6	10	6	9	*	*	*	*	*	*
40	13	15	12	14	10	14	9	13	8	13	7	12	*	*	*	*	*	*
50	15	18	14	17	12	17	11	16	10	15	9	14	*	*	*	*	*	*
60	18	21	16	19	14	20	12	19	11	17	10	16	*	*	*	*	*	*
70	20	24	18	22	16	23	14	21	16	20	12	18	*	*	*	*	*	*
80	22	26	20	25	17	25	16	24	14	22	13	20	*	*	*	*	*	*
90	25	29	22	27	19	28	17	26	16	24	14	22	*	*	*	*	*	*
100	27	32	24	29	21	30	19	28	17	26	15	24	*	*	*	*	*	*
110	29	34	26	32	22	32	20	30	18	28	17	26	*	*	*	*	*	*
120	31	37	28	34	24	35	22	33	20	30	18	28	*	*	*	*	*	*
130	33	39	30	36	26	37	23	35	21	32	19	30	*	*	*	*	*	*
140	35	41	32	38	27	39	25	37	22	34	20	32	*	*	*	*	*	*
150	37	44	34	41	29	42	26	39	24	36	21	33	*	*	*	*	*	*
160	39	46	36	43	30	44	27	41	25	38	22	35	*	*	*	*	*	*
170	41	48	37	45	32	46	29	43	26	40	23	37	*	*	*	*	*	*
180	43	51	39	47	33	48	30	45	27	42	25	39	*	*	*	*	*	*
190	45	53	41	49	35	50	31	47	29	44	26	40	*	*	*	*	*	*
200	47	55	43	51	36	53	33	49	30	46	27	42	*	*	*	*	*	*
220	51	59	46	55	39	57	35	53	32	49	29	45	*	*	*	*	*	*
240	54	64	49	59	42	61	38	57	34	53	31	49	*	*	*	*	*	*
260	58	68	53	63	45	65	41	61	37	57	33	52	*	*	*	*	*	*
280	61	72	56	67	47	69	43	65	39	60	35	55	*	*	*	*	*	*
300	-	-	59	71	50	73	45	68	41	63	37	58	*	*	*	*	*	*
320	-	-	-	-	-	-	48	72	43	67	39	61	*	*	*	*	*	*
340	-	-	-	-	-	-	-	-	46	70	41	64	*	*	*	*	*	*
360	-	-	-	-	-	-	-	-	-	-	43	67	*	*	*	*	*	*
380	-	-	-	-	-	-	-	-	-	-	45	70	*	*	*	*	*	*
400	-	-	-	-	-	-	-	-	-	-	-	-	*	*	*	*	*	*

Front and one side free - external dimensions

Watt	600x660x250 24 Mod/3Row		750x660x250 24 Mod/4Row		900x660x250 24 Mod/5Row		1050x660x250 24 Mod/6Row		1200x660x250 24 Mod/7Row		1350x660x250 24 Mod/8Row		1500x660x250 24 Mod/9Row		1650x660x250 24 Mod/10Row		1950x660x250 24 Mod/12Row	
	Half	Top	Half	Top	Half	Top	Half	Top	Half	Top	Half	Top	Half	Top	Half	Top	Half	Top
10	4	5	4	5	4	4	3	5	3	4	3	4	*	*	*	*	*	*
20	8	9	7	8	6	8	5	8	5	7	4	7	*	*	*	*	*	*
30	10	12	10	11	9	11	7	11	7	10	6	9	*	*	*	*	*	*
40	13	16	12	14	11	13	9	14	9	13	8	12	*	*	*	*	*	*
50	16	19	14	17	13	16	11	16	10	15	9	14	*	*	*	*	*	*
60	18	22	17	20	15	18	13	19	12	18	11	17	*	*	*	*	*	*
70	21	24	19	23	17	21	15	22	13	20	12	19	*	*	*	*	*	*
80	23	27	21	25	19	23	16	24	15	23	14	21	*	*	*	*	*	*
90	25	30	23	28	21	25	18	26	16	25	15	23	*	*	*	*	*	*
100	28	32	25	30	23	28	20	29	18	27	16	25	*	*	*	*	*	*
110	30	35	27	33	24	30	21	31	19	29	18	27	*	*	*	*	*	*
120	32	38	29	35	26	32	23	33	21	31	19	29	*	*	*	*	*	*
130	34	40	31	37	28	34	24	36	22	33	20	31	*	*	*	*	*	*
140	36	43	33	40	30	36	26	38	23	35	21	33	*	*	*	*	*	*
150	38	45	35	42	31	38	27	40	25	37	23	35	*	*	*	*	*	*
160	40	47	37	44	33	40	29	42	26	39	24	36	*	*	*	*	*	*
170	42	50	38	46	35	42	30	44	27	41	25	38	*	*	*	*	*	*
180	44	52	40	48	36	44	31	46	29	43	26	40	*	*	*	*	*	*
190	46	54	42	51	38	46	33	48	30	45	27	42	*	*	*	*	*	*
200	48	57	44	53	40	48	34	50	31	47	28	44	*	*	*	*	*	*
220	52	61	47	57	43	52	37	54	34	51	31	47	*	*	*	*	*	*
240	56	66	51	61	46	56	39	58	36	55	33	51	*	*	*	*	*	*
260	60	70	54	65	49	60	42	62	39	58	35	54	*	*	*	*	*	*
280	-	-	57	69	52	63	45	66	41	62	37	57	*	*	*	*	*	*
300	-	-	61	73	55	67	47	70	43	65	39	60	*	*	*	*	*	*
320	-	-	-	-	58	71	-	-	46	69	41	64	*	*	*	*	*	*
340	-	-	-	-	-	-	-	-	48	72	43	67	*	*	*	*	*	*
360	-	-	-	-	-	-	-	-	-	-	46	70	*	*	*	*	*	*
380	-	-	-	-	-	-	-	-	-	-	-	-	*	*	*	*	*	*

Front side free - external dimensions

Watt	600x660x250 24 Mod/3Row		750x660x250 24 Mod/4Row		900x660x250 24 Mod/5Row		1050x660x250 24 Mod/6Row		1200x660x250 24 Mod/7Row		1350x660x250 24 Mod/8Row		1500x660x250 24 Mod/9Row		1650x660x250 24 Mod/10Row		1950x660x250 24 Mod/12Row	
	Half	Top	Half	Top	Half	Top	Half	Top	Half	Top	Half	Top	Half	Top	Half	Top	Half	Top
10	4	5	4	5	4	5	3	5	3	4	3	4	*	*	*	*	*	*
20	8	9	7	9	6	8	6	8	5	8	5	7	*	*	*	*	*	*
30	11	13	10	12	9	11	8	11	7	10	7	10	*	*	*	*	*	*
40	14	16	12	15	11	14	10	14	9	13	8	12	*	*	*	*	*	*
50	16	19	15	18	14	17	12	17	11	16	10	15	*	*	*	*	*	*
60	19	22	17	21	16	19	13	19	12	18	11	17	*	*	*	*	*	*
70	21	25	19	23	18	22	15	22	14	21	13	19	*	*	*	*	*	*
80	24	28	22	26	20	24	17	24	16	23	14	22	*	*	*	*	*	*
90	26	31	24	29	22	27	19	27	17	25	16	24	*	*	*	*	*	*
100	29	33	26	31	24	29	20	29	19	28	17	26	*	*	*	*	*	*
110	31	36	28	33	26	31	22	31	20	30	19	28	*	*	*	*	*	*
120	33	39	30	36	27	34	24	34	22	32	20	30	*	*	*	*	*	*
130	35	41	32	38	29	36	25	36	23	34	21	32	*	*	*	*	*	*
140	37	44	34	41	31	38	27	38	24	36	22	34	*	*	*	*	*	*
150	39	46	36	43	33	40	28	40	26	38	24	36	*	*	*	*	*	*
160	42	49	38	45	35	42	30	43	27	40	25	38	*	*	*	*	*	*
170	44	51	39	48	36	44	31	45	29	42	26	40	*	*	*	*	*	*
180	46	54	41	50	38	46	33	47	30	44	28	41	*	*	*	*	*	*
190	48	56	43	52	40	49	34	49	31	46	29	43	*	*	*	*	*	*
200	50	58	45	54	41	51	35	51	33	48	30	45	*	*	*	*	*	*
220	54	63	49	58	45	55	38	55	35	52	32	49	*	*	*	*	*	*
240	58	68	52	63	48	59	41	59	38	56	35	52	*	*	*	*	*	*
260	61	72	56	67	51	62	44	63	40	59	37	56	*	*	*	*	*	*
280	-	-	59	71	54	66	47	67	43	63	39	59	*	*	*	*	*	*
300	-	-	-	-	57	70	49	71	45	67	42	63	*	*	*	*	*	*
320	-	-	-	-	-	-	-	-	48	70	44	66	*	*	*	*	*	*
340	-	-	-	-	-	-	-	-	-	-	46	69	*	*	*	*	*	*
360	-	-	-	-	-	-	-	-	-	-	48	72	*	*	*	*	*	*
380	-	-	-	-	-	-	-	-	-	-	-	-	*	*	*	*	*	*

* not available

Enclosure 36 modules

According IEC 60890, temperature rise in Kelvin

Rear against wall - external dimensions

	900x876x250		1050x876x250		1200x876x250		1350x876x250		1500x876x250		1650x876x250		1950x876x250	
Watt	36 Mod/5Row		36 Mod/6Row		36 Mod/7Row		36 Mod/8Row		36 Mod/9Row		36 Mod/10Row		36 Mod/12Row	
	Half	Top	Half	Top	Half	Top	Half	Top	Half	Top	Half	Top	Half	Top
10	3	4	2	3	2	3	2	3	2	3	2	2	*	*
20	5	7	4	6	4	5	3	5	3	5	3	4	*	*
30	7	9	6	8	5	7	4	7	4	6	4	6	*	*
40	8	12	7	11	6	9	6	8	5	8	5	7	*	*
50	10	14	9	13	8	11	7	10	6	9	6	9	*	*
60	12	16	10	15	9	13	8	12	7	11	6	10	*	*
70	13	18	12	17	10	15	9	13	8	12	7	11	*	*
80	15	20	13	18	11	16	10	15	9	14	8	13	*	*
90	16	22	14	20	12	18	11	16	10	15	9	14	*	*
100	18	24	15	22	13	20	12	17	11	16	10	15	*	*
120	20	28	18	26	15	23	13	20	12	19	11	18	*	*
140	23	32	20	29	17	26	15	23	14	22	13	20	*	*
160	26	36	22	32	19	29	17	25	16	24	14	22	*	*
180	28	39	25	35	21	31	18	28	17	26	16	24	*	*
200	31	43	27	39	23	34	20	30	19	29	17	27	*	*
220	33	46	29	42	25	37	22	33	20	31	18	29	*	*
240	35	49	31	45	27	40	23	35	22	33	20	31	*	*
260	38	53	33	48	29	42	25	38	23	36	21	33	*	*
280	40	56	35	51	30	45	26	40	24	38	22	35	*	*
300	42	59	37	53	32	47	28	42	26	40	24	37	*	*
320	45	62	39	56	34	50	29	44	27	42	25	39	*	*
340	47	65	41	59	35	52	31	47	29	44	26	41	*	*
360	49	68	43	62	37	55	32	49	30	46	27	43	*	*
380	51	71	45	65	39	57	34	51	31	48	28	45	*	*
400	-	-	47	67	40	60	35	53	33	50	30	47	*	*
420	-	-	49	70	42	62	37	55	34	52	31	48	*	*
440	-	-	-	-	44	64	38	57	35	54	32	50	*	*
460	-	-	-	-	45	67	39	59	36	56	33	52	*	*
480	-	-	-	-	47	69	41	61	38	58	34	54	*	*
500	-	-	-	-	48	71	42	64	39	60	36	56	*	*
520	-	-	-	-	-	-	43	66	40	62	37	57	*	*
540	-	-	-	-	-	-	45	68	41	64	38	59	*	*
560	-	-	-	-	-	-	46	70	43	66	39	61	*	*
580	-	-	-	-	-	-	-	-	44	68	40	63	*	*
600	-	-	-	-	-	-	-	-	45	70	41	64	*	*
650	-	-	-	-	-	-	-	-	-	-	44	69	*	*
700	-	-	-	-	-	-	-	-	-	-	47	73	*	*
750	-	-	-	-	-	-	-	-	-	-	-	-	*	*

Front and one side free - external dimensions

	900x876x250		1050x876x250		1200x876x250		1350x876x250		1500x876x250		1650x876x250		1950x876x250	
Watt	36 Mod/5Row		36 Mod/6Row		36 Mod/7Row		36 Mod/8Row		36 Mod/9Row		36 Mod/10Row		36 Mod/12Row	
	Half	Top	Half	Top	Half	Top	Half	Top	Half	Top	Half	Top	Half	Top
10	3	4	3	4	2	3	2	3	2	3	2	2	*	*
20	5	7	4	6	4	6	3	5	3	5	3	4	*	*
30	7	9	6	9	5	8	5	7	4	6	4	6	*	*
40	9	12	8	11	7	10	6	9	5	8	5	8	*	*
50	10	14	9	13	8	12	7	10	6	10	6	9	*	*
60	12	16	11	15	9	14	8	12	7	11	7	10	*	*
70	14	19	12	17	11	15	9	14	8	12	8	12	*	*
80	15	21	13	19	12	17	10	15	9	14	9	13	*	*
90	17	23	15	21	13	19	11	17	10	15	9	14	*	*
100	18	25	16	23	14	20	12	18	11	17	10	16	*	*
120	21	29	19	26	16	24	14	21	13	19	12	18	*	*
140	24	33	21	30	18	27	16	24	14	22	13	21	*	*
160	26	36	23	33	20	30	18	26	16	24	15	23	*	*
180	29	40	26	37	23	33	20	29	18	27	16	25	*	*
200	32	43	28	40	25	36	21	32	19	29	18	27	*	*
220	34	47	30	43	26	38	23	34	21	31	19	30	*	*
240	37	50	33	46	28	41	25	37	22	34	21	32	*	*
260	39	54	35	49	30	44	26	39	24	36	22	34	*	*
280	41	57	37	52	32	47	28	41	25	38	23	36	*	*
300	44	60	39	55	34	49	29	44	27	40	25	38	*	*
320	46	63	41	58	36	52	31	46	28	42	26	40	*	*
340	48	66	43	61	38	55	33	48	29	44	27	42	*	*
360	51	70	45	64	39	57	34	51	31	47	29	44	*	*
380	53	73	47	67	41	60	36	53	32	49	30	46	*	*
400	-	-	49	69	43	62	37	55	34	51	31	48	*	*
420	-	-	51	72	45	65	39	57	35	53	32	50	*	*
440	-	-	-	-	46	67	40	60	36	55	34	52	*	*
460	-	-	-	-	48	70	42	62	37	57	35	54	*	*
480	-	-	-	-	50	72	43	64	39	59	36	55	*	*
500	-	-	-	-	-	-	44	66	40	61	37	57	*	*
520	-	-	-	-	-	-	46	68	41	63	38	59	*	*
540	-	-	-	-	-	-	47	70	43	65	40	61	*	*
560	-	-	-	-	-	-	49	72	44	66	41	63	*	*
580	-	-	-	-	-	-	-	-	45	68	42	64	*	*
600	-	-	-	-	-	-	-	-	46	70	43	66	*	*
650	-	-	-	-	-	-	-	-	-	-	46	71	*	*
700	-	-	-	-	-	-	-	-	-	-	-	-	*	*

* not available

Enclosure 36 modules

According IEC 60890, temperature rise in Kelvin

Front side free - external dimensions

	900x876x250		1050x876x250		1200x876x250		1350x876x250		1500x876x250		1650x876x250		1950x876x250	
Watt	36 Mod/5Row		36 Mod/6Row		36 Mod/7Row		36 Mod/8Row		36 Mod/9Row		36 Mod/10Row		36 Mod/12Row	
	Half	Top	Half	Top	Half	Top	Half	Top	Half	Top	Half	Top	Half	Top
10	3	4	3	4	2	3	2	3	2	3	2	3	*	*
20	5	7	5	6	4	6	4	5	3	5	3	4	*	*
30	7	9	6	9	6	8	5	7	4	6	4	6	*	*
40	9	12	8	11	7	10	6	9	5	8	5	8	*	*
50	11	14	10	13	9	12	7	11	7	10	6	9	*	*
60	12	17	11	15	10	14	9	12	8	11	7	11	*	*
70	14	19	13	17	11	16	10	14	9	13	8	12	*	*
80	16	21	14	19	12	18	11	16	10	14	9	14	*	*
90	17	23	15	21	14	19	12	17	11	16	10	15	*	*
100	19	25	17	23	15	21	13	19	11	17	11	16	*	*
120	22	29	19	27	17	24	15	22	13	20	12	19	*	*
140	25	33	22	30	19	28	17	25	15	22	14	21	*	*
160	27	36	25	34	22	31	19	27	17	25	16	24	*	*
180	30	40	27	37	24	34	21	30	18	27	17	26	*	*
200	33	44	29	40	26	37	23	33	20	30	19	28	*	*
220	35	47	32	44	28	40	24	35	22	32	20	30	*	*
240	38	50	34	47	30	42	26	38	23	34	22	33	*	*
260	40	54	36	50	32	45	28	40	25	36	23	35	*	*
280	43	57	38	53	34	48	30	43	26	39	25	37	*	*
300	45	60	41	56	36	51	31	45	28	41	26	39	*	*
320	48	64	43	59	38	53	33	48	29	43	27	41	*	*
340	50	67	45	62	40	56	35	50	31	45	29	43	*	*
360	53	70	47	65	42	59	36	53	32	47	30	45	*	*
380	55	73	49	68	43	61	38	55	33	49	31	47	*	*
400	-	-	51	70	45	64	40	57	35	52	33	49	*	*
420	-	-	53	73	47	67	41	59	36	54	34	51	*	*
440	-	-	-	-	49	69	43	62	38	56	35	53	*	*
460	-	-	-	-	51	72	44	64	39	58	37	55	*	*
480	-	-	-	-	-	-	46	66	40	60	38	57	*	*
500	-	-	-	-	-	-	47	68	42	62	39	59	*	*
520	-	-	-	-	-	-	49	71	43	64	40	61	*	*
540	-	-	-	-	-	-	-	-	44	66	42	63	*	*
560	-	-	-	-	-	-	-	-	46	68	43	65	*	*
580	-	-	-	-	-	-	-	-	47	69	44	66	*	*
600	-	-	-	-	-	-	-	-	48	71	45	68	*	*
650	-	-	-	-	-	-	-	-	-	-	48	73	*	*
700	-	-	-	-	-	-	-	-	-	-	-	-	*	*

* not available

Stand alone - IP55

Temperature rise [Kelvin]

DISSIPATION	2000x500x650		2000x500x900		2000x700x650		2000x700x900	
Watt	Half	Top	Half	Top	Half	Top	Half	Top
200	12	18	10	15	11	15	9	13
220	13	19	11	16	11	16	10	14
240	14	21	12	17	12	17	11	15
260	15	22	13	18	13	19	12	16
280	16	23	13	19	14	20	12	17
300	16	25	14	20	15	21	13	18
350	19	28	16	23	16	24	15	20
400	21	31	18	26	18	26	16	22
450	23	34	20	28	20	29	18	25
500	25	37	21	31	22	31	19	27
550	27	40	23	33	24	34	21	29
600	29	43	25	36	25	36	23	31
650	31	46	27	38	27	39	24	33
700	32	49	28	40	29	41	26	35
750	34	52	30	43	30	44	27	37
800	36	54	31	45	32	46	28	39
850	38		33	47	34	48	30	41
900	40		34	49	35	50	31	43
950	41		36	52	37	53	33	45
1000	43		38	54	38	55	34	47
1100							37	50
1200							39	54
1300							42	
1400							45	

Stand alone - IP55 - with separate busbar compartments

Temperature rise [Kelvin]

DISSIPATION	2000x500x650+400		2000x500x900+400		2000x700x650+400		2000x700x900+400	
Watt	Half	Top	Half	Top	Half	Top	Half	Top
200	10	13	9	12	9	12	8	11
220	10	15	10	13	10	13	9	12
240	11	16	10	14	10	14	9	12
260	12	17	11	15	11	15	10	13
280	13	18	12	16	12	16	11	14
300	13	19	12	17	12	17	11	15
350	15	21	14	19	14	19	13	17
400	17	24	15	21	15	21	14	19
450	18	26	17	23	17	23	16	21
500	20	28	18	25	19	25	17	22
550	22	30	20	27	20	27	18	24
600	23	33	21	29	21	29	20	26
650	25	35	23	31	23	31	21	28
700	26	37	24	33	24	33	22	29
750	28	39	26	35	26	35	24	31
800	29	41	27	37	27	36	25	33
850	31	43	28	39	28	38	26	34
900	32	45	30	40	30	40	27	36
950	34	47	31	42	31	42	28	38
1000	35	49	32	44	32	44	30	39
1100	38	53	35	48	35	47	32	42
1200	41		37	51	37	50	34	45
1300	43		40	54	40	54	37	48
1400			42		42		39	51

Rear against wall - IP55

Temperature rise [Kelvin]

DISSIPATION	2000x500x650		2000x500x900		2000x700x650		2000x700x900	
Watt	Half	Top	Half	Top	Half	Top	Half	Top
200	13	19	11	16	11	16	10	13
220	14	20	12	17	12	17	11	14
240	15	22	13	18	13	18	12	16
260	16	23	14	20	14	19	12	17
280	17	25	15	21	15	21	13	18
300	18	26	16	22	16	22	14	19
350	20	30	18	25	18	25	16	21
400	22	33	20	28	20	28	17	23
450	25	36	22	30	22	30	19	26
500	27	39	24	33	23	33	21	28
550	29	43	25	36	25	36	23	30
600	31	46	27	38	27	38	24	32
650	33	49	29	41	29	41	26	35
700	35	52	31	43	31	43	27	37
750	37	55	33	46	33	46	29	39
800	39		34	48	34	48	30	41
850	41		36	51	36	50	32	43
900	43		38	53	38	53	34	45
950	45		39		39		35	47
1000	47		41		41		36	49
1100							39	53
1200							42	
1300							45	
1400							48	

Rear against wall - IP55 - with separate busbar compartments

Temperature rise [Kelvin]

DISSIPATION	2000x500x650+400		2000x500x900+400		2000x700x650+400		2000x700x900+400	
Watt	Half	Top	Half	Top	Half	Top	Half	Top
200	11	14	10	13	9	12	9	11
220	11	16	10	14	10	13	10	12
240	12	17	11	15	11	14	10	13
260	13	18	12	16	12	15	11	14
280	14	19	13	17	12	16	12	15
300	15	20	13	18	13	17	12	16
350	17	23	15	20	15	20	14	18
400	18	25	17	22	16	22	15	20
450	20	28	18	25	18	24	17	22
500	22	30	20	27	20	26	18	24
550	24	33	22	29	21	28	20	26
600	25	35	23	31	23	30	21	27
650	27	37	25	33	24	32	23	29
700	29	40	26	35	26	34	24	31
750	30	42	28	37	27	36	25	33
800	32	44	29	39	29	38	27	35
850	34	46	31	41	30	40	28	36
900	35	49	32	43	32	42	29	38
950	37	51	33	45	33	44	31	40
1000	38	53	35	47	34	45	32	41
1100	41		38	50	37	49	35	45
1200	44		40	54	40	53	37	48
1300			43		43		40	51
1400			46		45		42	54

Front, left and upperside free - IP55

Temperature rise [Kelvin]

DISSIPATION	2000x500x650		2000x500x900		2000x700x650		2000x700x900	
Watt	Half	Top	Half	Top	Half	Top	Half	Top
200	13	19	12	16	12	17	11	14
220	14	21	13	18	13	18	12	15
240	15	22	14	19	14	19	12	16
260	16	24	15	20	15	21	13	17
280	17	25	16	22	16	22	14	18
300	18	27	17	23	17	23	15	20
350	21	30	19	26	19	26	17	22
400	23	33	21	29	21	29	19	25
450	25	37	23	32	23	32	21	27
500	28	40	25	34	25	35	22	29
550	30	43	27	37	27	38	24	32
600	32	46	29	40	29	41	26	34
650	34	49	31	43	31	43	28	36
700	36	52	33	45	33	46	29	39
750	38		35	48	35	49	31	41
800	40		36	50	37	51	33	43
850	42		38	53	39	54	34	45
900	44		40		41		36	47
950	46		42		43		37	49
1000	48		43		44		39	51
1100							42	
1200							45	
1300							48	
1400							51	

Front, left and upperside free - IP55 - with separate busbar compartments (*)

DISSIPATION	2000x500x650+400		2000x500x900+400		2000x700x650+400		2000x700x900+400	
Watt	Half	Top	Half	Top	Half	Top	Half	Top
200	11	15	10	13	10	13	9	12
220	12	16	11	14	11	14	10	12
240	13	17	12	15	12	15	11	13
260	14	19	12	16	12	16	11	14
280	15	20	13	17	13	17	12	15
300	15	21	14	18	14	18	13	16
350	17	23	16	21	16	20	14	18
400	19	26	17	23	17	23	16	20
450	21	29	19	25	19	25	18	22
500	23	31	21	27	21	27	19	24
550	25	34	22	30	23	29	21	26
600	27	36	24	32	24	31	22	28
650	29	39	26	34	26	33	24	30
700	30	41	27	36	27	35	25	32
750	32	43	29	38	29	37	26	33
800	34	46	30	40	30	39	28	35
850	35	48	32	42	32	41	29	37
900	37	50	33	44	33	43	31	39
950	39	52	35	46	35	45	32	40
1000	40	55	36	48	36	47	33	42
1100	44		39	52	39	51	36	46
1200			42	55	42	55	39	49
1300					45		41	52
1400							44	55

(*) Temperature rise [Kelvin]

Frontside and upperside free - IP55

Temperature rise [Kelvin]

DISSIPATION	2000x500x650		2000x500x900		2000x700x650		2000x700x900	
Watt	Half	Top	Half	Top	Half	Top	Half	Top
200	14	20	13	17	13	18	12	15
220	16	22	14	18	14	19	12	16
240	17	24	15	20	15	20	13	17
260	18	25	16	21	16	22	14	18
280	19	27	17	22	17	23	15	19
300	20	28	18	23	18	25	16	20
350	23	32	20	27	21	28	18	23
400	25	36	22	30	23	31	20	26
450	28	39	24	33	25	34	22	28
500	30	43	26	35	28	37	24	31
550	33	46	29	38	30	40	26	33
600	35	49	31	41	32	43	28	36
650	37	53	33	44	34	46	30	38
700	40		35	46	36	48	32	40
750	42		37	49	38	51	33	43
800	44		39	52	40	54	35	45
850	46		40	54	42		37	47
900	48		42		44		39	49
950	51		44		46		40	51
1000	53		46		48		42	54
1100							45	
1200							49	
1300							52	
1400								

Frontside and upperside free - IP55 - with separate busbar compartments (*)

DISSIPATION	2000x500x650+400		2000x500x900+400		2000x700x650+400		2000x700x900+400	
Watt	Half	Top	Half	Top	Half	Top	Half	Top
200	12	15	10	13	11	13	10	12
220	13	17	11	14	12	14	10	13
240	14	18	12	15	12	15	11	14
260	14	19	13	16	13	16	12	14
280	15	20	14	17	14	18	13	15
300	16	21	14	18	15	19	13	16
350	18	24	16	21	17	21	15	18
400	20	27	18	23	19	23	17	20
450	22	29	20	25	20	26	18	23
500	24	32	22	28	22	28	20	25
550	26	35	24	30	24	30	22	26
600	28	37	25	32	26	32	23	28
650	30	40	27	34	28	34	25	30
700	32	42	29	36	29	37	26	32
750	34	44	30	38	31	39	28	34
800	36	47	32	40	33	41	29	36
850	37	49	33	42	34	43	31	38
900	39	51	35	44	36	45	32	39
950	41	54	37	46	37	47	34	41
1000	43		38	48	39	49	35	43
1100	46		41	52	42	53	38	46
1200	49		44		45		41	50
1300	53		47		48		43	53
1400			50		51		46	

(*) Temperature rise [Kelvin]

Stand alone

Temperature rise [Kelvin]

DISSIPATION	EH1 752x385x270		EH2-NA 256x433x240		EH2-NB 516x433x240		EH2-NC 791x433x240		EH2-ND 1066x433x240	
Watt	Half	Top	Half	Top	Half	Top	Half	Top	Half	Top
10		5	7	8	5	6		5		5
20	7	9	13	14	8	10	7	8	5	8
30	10	12	17	19	11	14	9	12	7	11
40	12	15	22	24	14	17	12	15	9	14
50	15	18	26	29	17	21	14	17	11	17
60	17	21	30	34	20	24	16	20	13	20
70	19	24	34	38	23	27	18	23	14	23
80	21	26	38	43	25	30	20	25	16	25
90	23	29	42	47	28	33	23	28	18	28
100	25	32	46	51	30	36	25	30	19	30
120	29	37	53		35	42	28	35	22	35
140	33	41			39	48	32	40	25	40
160	37	46			44	53	36	44	28	44
180	41	51			48		39	49	31	49
200	44	55			53		43	53	34	53
220	48				57		46		36	57
240	51						50		39	
260	55						53		42	
280							56		44	
300									47	
350									53	

Stand alone

Temperature rise [Kelvin]

DISSIPATION	EH4-00 1004x395x224		EH4-0 1004x495x224		EH4-1 1004x745x224		EH4-S1 820x320x234	
Watt	Half	Top	Half	Top	Half	Top	Half	Top
10		4		5			4	5
20	6	8	5	8		6	7	9
30	9	11	7	11	5	8	10	13
40	11	14	9	14	7	10	13	16
50	13	16	11	17	8	12	15	19
60	15	19	13	20	9	14	18	22
70	17	21	14	22	11	15	20	25
80	19	24	16	25	12	17	22	28
90	21	26	18	27	13	19	25	31
100	23	28	19	29	14	21	27	34
120	26	33	22	34	16	24	31	39
140	30	37	25	39	19	27	35	44
160	33	41	28	43	21	30	39	49
180	36	45	31	47	23	33	43	54
200	39	49	33	51	25	36	47	59
220	42	53	36	55	27	39	51	64
240	46	57	39	59	29	42	54	68
260	49	61	41	63	31	44	58	73
280	52	65	44	67	33	47	62	77
300	55	68	46	71	34	50	65	
350	62	77	52		39	56	74	
400	69		58		43	63		
450	76		64		48	69		
500			70		52	75		
550			75		56			
600					60			
650					64			
700					68			
750					72			
800					76			
850					80			

Stand alone

Temperature rise [Kelvin]

DISSIPATION	EH3/F-0 EH3/AP-0 875x590x320		EH3/F-1 EH3/AP-1 875x785x320		EH3/F-2 EH3/AP-2 875x1115x320		EH3/F-3 EH3/AP-3 875x1445x320		EH3/AP-20 1125x590x320		EH3/AP-21 1125x785x320		EH3/AP-22 1125x1115x320		EH3/AP23 1125x1445x320		EH6-00 830x470x320		EH6-0 830x605x320		EH6-1 830x800x320	
Watt	Half	Top	Half	Top	Half	Top	Half	Top	Half	Top	Half	Top	Half	Top	Half	Top	Half	Top	Half	Top	Half	Top
10																		4				
20	5	6		5						5		4					5	8	5	7		5
30	6	9	5	7		5			5	7	4	6		4			8	11	7	9	5	7
40	8	11	6	9	5	6		5	6	9	5	7		5		4	9	13	8	11	7	9
50	10	13	8	10	6	7	5	6	8	11	6	8	5	6	4	5	11	16	10	14	8	11
60	11	16	9	12	7	9	5	7	9	13	7	10	5	7	5	6	13	19	11	16	9	12
70	13	18	10	13	7	10	6	8	10	14	8	11	6	8	5	7	15	21	13	18	10	14
80	14	20	11	15	8	11	7	8	11	16	9	12	7	9	6	8	17	23	14	20	12	15
90	16	22	12	16	9	12	7	9	12	18	10	14	7	10	7	9	18	26	16	22	13	17
100	17	23	13	18	10	13	8	10	13	19	11	15	8	11	7	9	20	28	17	24	14	18
120	20	27	15	21	11	15	9	12	15	22	12	17	9	12	8	11	23	32	20	27	16	21
140	22	31	17	23	13	17	10	13	17	25	14	19	10	14	9	12	26	37	23	31	18	24
160	25	34	19	26	14	19	12	15	19	28	15	22	12	16	10	14	29	41	25	35	20	27
180	27	38	21	29	16	21	13	16	21	31	17	24	13	17	11	15	32	45	28	38	22	29
200	29	41	23	31	17	22	14	18	23	33	18	26	14	19	13	16	34	49	30	41	24	32
220	32	44	25	34	19	24	15	19	25	36	20	28	15	20	14	18	37	53	33	45	26	35
240	34	47	27	36	20	26	16	21	27	39	21	30	16	22	14	19	40	57	35	48	28	37
260	36	51	29	38	21	28	17	22	28	41	23	32	17	23	15	20	43		37	51	30	40
280	39	54	30	41	23	29	18	23	30	44	24	34	18	25	16	21	45		40	54	32	42
300	41	57	32	43	24	31	19	25	32	46	26	36	19	26	17	23	48		42		33	44
350	46		36	49	27	35	22	28	36	52	29	40	22	29	20	26	54		47		38	50
400	51		41	54	30	39	24	31	40		32	45	24	33	22	29			53		42	56
450	57		45		33	43	27	34	44		35	50	27	36	24	31					46	
500			48		36	47	29	37	48		39	54	29	39	26	34					50	
550			52		39	51	31	40	52		42		31	42	28	37					54	
600			56		42	54	34	43	56		45		34	45	30	40						
650					45		36	46			48		36	48	32	42						
700					47		38	49			51		38	51	34	45						
750					50		40	51			53		40	54	36	47						
800					53		42	54			56		43		38	50						
850					55		44	57					45		40	52						
900							47						47		42	55						
950							49						49		44							
1000							51						51		46							
1100							55						55		49							
1200															53							
1300															56							

Stand alone

Temperature rise [Kelvin]

DISSIPATION	EH3/GD-AP - 031 875x676x424		EH3/GD-AP - 041 875x871x424		EH3/GD-AP - 051 875x1200x424		EH3/GD-AP - 233 1125x676x676		EH3/GD-AP - 243 1125x871x676		EH3/GD-AP - 253 1125x1200x676	
Watt	Half	Top	Half	Top	Half	Top	Half	Top	Half	Top	Half	Top
10												
20		5										
30	5	7	4	5				4				
40	6	8	5	7		5		5		5		
50	7	10	6	8	5	6	5	6	4	5		5
60	9	11	7	9	5	7	5	7	5	6	4	5
70	10	13	8	10	6	8	6	8	6	7	5	6
80	11	14	9	12	7	9	7	9	6	8	5	7
90	12	16	10	13	8	10	7	10	7	9	6	7
100	13	17	11	14	8	11	8	11	7	10	6	8
120	15	20	12	16	10	12	9	12	9	11	7	9
140	17	22	14	18	11	14	11	14	10	13	8	11
160	19	25	16	20	12	15	12	15	11	14	9	12
180	21	27	17	22	13	17	13	17	12	15	10	13
200	23	30	19	24	14	18	14	18	13	17	11	14
220	24	32	20	26	16	20	15	20	14	18	12	15
240	26	35	22	28	17	21	16	21	15	19	13	16
260	28	37	23	30	18	23	17	23	16	21	14	18
280	30	39	25	32	19	24	18	24	17	22	15	19
300	31	41	26	34	20	25	19	26	18	23	16	20
350	35	47	29	38	23	29	22	29	20	26	18	22
400	39	52	33	42	25	32	25	32	23	29	20	25
450	43		36	47	28	35	27	35	25	32	22	27
500	47		39	51	30	38	29	38	27	35	24	30
550	51		42	55	33	41	32	42	29	38	25	32
600	55		45		35	44	34	45	31	40	27	34
650			48		37	47	36	47	34	43	29	37
700			51		40	50	38	50	36	46	31	39
750			54		42	53	41	53	38	48	33	41
800					44	56	43	56	40	51	34	43
850					46		45		42	54	36	46
900					49		47		44	56	38	48
950					51		49		46		40	50
1000					53		51		47		41	52
1100							55		51		44	56
1200									55		48	
1300											51	
1400											54	

Enclosures depth = 355 mm

Stand alone

Temperature rise [Kelvin]

Type / DISSIPATION	RVL 300 650x480		RVL 30 650x595		RVL 31 650x790		RVL32 650x1120		RVN 300 900x460		RVN 30 900x595		RVN 31 900x790		RVN 32 900x1120		RVN 33 900x1450		RVN 34 900x1780		RVD 30 1000x595	
Watt	Half	Top	Half	Top	Half	Top	Half	Top	Half	Top	Half	Top	Half	Top	Half	Top	Half	Top	Half	Top	Half	Top
10		5		4						4												
20	6	8	5	7	5	6		4	5	7	4	6		4						5		5
30	9	11	7	10	6	8	4	6	7	10	6	8	5	6		5			5	6	5	7
40	11	14	9	12	8	10	6	7	9	12	7	10	6	8	4	6		5	6	8	7	9
50	13	16	11	15	9	12	7	9	10	15	9	12	7	9	5	7	4	6	7	10	8	11
60	16	19	13	17	11	14	8	10	12	17	10	14	8	11	6	8	5	6	8	11	9	13
70	18	22	15	19	12	16	9	11	14	19	12	16	9	12	7	9	6	7	9	12	11	15
80	20	24	16	22	14	18	10	12	15	22	13	18	10	13	8	10	6	8	11	14	12	16
90	22	26	18	24	15	20	11	14	17	24	14	20	11	15	8	11	7	9	12	15	13	18
100	23	29	20	26	17	21	12	15	18	26	16	21	12	16	9	12	8	10	13	17	14	20
120	27	33	23	30	19	25	14	17	21	30	18	25	14	19	11	14	9	11	15	19	16	23
140	31	38	26	34	22	28	15	19	24	34	20	28	16	21	12	16	10	13	17	22	18	26
160	34	42	29	38	24	31	17	22	27	38	23	31	18	23	13	17	11	14	18	24	21	29
180	38	46	31	41	27	34	19	24	29	42	25	34	19	26	15	19	12	15	20	27	23	32
200	41	50	34	45	29	37	21	26	32	45	27	38	21	28	16	21	13	17	22	29	25	34
220	44	54	37	49	31	40	22	28	34	49	29	41	23	30	17	22	14	18	24	31	27	37
240	47		40	52	34	43	24	30	37	52	32	43	24	32	19	24	15	20	26	34	28	40
260	51		42	55	36	46	25	32	39	56	34	46	26	35	20	26	16	21	27	36	30	42
280	54		45		38	49	27	34	42		36	49	28	37	21	27	17	22	29	38	32	45
300	57		47		40	51	29	36	44		38	52	29	39	22	29	18	23	31	40	34	48
350			54		45		32	41	50		43		33	44	25	33	21	26	35	46	38	54
400					51		36	45	56		48		37	49	28	36	23	29	38	51	43	
450					56		40	50			52		40	54	31	40	25	32	42	56	47	
500							43	54					44		34	43	28	35	46		51	
550							47						47		36	47	30	38	50		55	
600							50						51		39	50	32	41	53			
650							53						54		42	54	34	43	57			
700							56								44	57	36	46				
750															47		38	49				
800															49		40	51				
850															52		42	54				
900															54		44	56				
950															56		46					
1000																	48					
1100																	52					
1200																	56					
1300																						
1400																						
1500																						

Type / DISSIPATION	RVD 31 1000x790		RVD 32 1000x1120		RVD 33 1000x1450		RVD 34 1000x1780		RVH 31 1150x790		RVH 32 1150x1120		RVH 33 1150x1450		RVH 34 1150x1780		RVS 33 1350x1450		RVS 34 1350x1780	
Watt	Half	Top	Half	Top	Half	Top	Half	Top	Half	Top	Half	Top	Half	Top	Half	Top	Half	Top	Half	Top
10																				
20		4						4												
30	4	6		4			4	6		5						5				5
40	5	7	4	5		5	5	7	5	7		5		4	5	7		4	4	6
50	6	9	5	6	4	5	6	9	6	8	4	6		5	6	8		5	5	7
60	7	10	6	7	5	6	8	10	7	9	5	7	5	6	7	9	4	6	6	8
70	8	11	6	8	6	7	9	11	7	10	6	8	5	7	8	11	5	6	7	9
80	9	12	7	9	6	8	9	13	8	11	6	8	6	8	9	12	5	7	7	10
90	10	14	8	10	7	9	10	14	9	13	7	9	6	8	9	13	6	8	8	11
100	11	15	8	11	7	10	11	15	10	14	8	10	7	9	10	14	6	8	9	12
120	13	17	10	13	9	11	13	18	11	16	9	12	8	10	12	16	7	10	10	14
140	14	19	11	14	10	13	15	20	13	18	10	13	9	12	14	18	8	11	12	16
160	16	22	12	16	11	14	17	22	14	20	11	15	10	13	15	21	9	12	13	18
180	18	24	14	18	12	15	18	24	16	22	12	16	11	14	17	23	10	13	14	20
200	19	26	15	19	13	17	20	26	17	24	13	18	12	16	18	25	11	15	16	22
220	21	28	16	21	14	18	21	29	19	26	14	19	13	17	19	26	12	16	17	24
240	22	30	17	22	15	19	23	31	20	28	15	21	14	18	21	28	13	17	18	25
260	24	32	18	24	16	21	24	33	21	29	16	22	15	19	22	30	14	18	19	27
280	25	34	19	25	17	22	26	35	23	31	17	23	16	21	24	32	14	19	20	29
300	27	36	20	27	18	23	27	37	24	33	18	25	17	22	25	34	15	20	22	30
350	30	41	23	30	20	26	31	41	27	37	21	28	19	25	28	38	17	23	24	34
400	33	45	26	34	23	29	35	46	30	42	23	31	21	27	31	43	19	26	27	38
450	37	50	28	37	25	32	38	51	33	46	26	34	23	30	35	47	21	28	30	42
500	40	54	31	40	27	35	41	55	36	50	28	37	25	33	38	51	23	31	33	46
550	43		33	43	29	38	45		39	54	30	40	27	35	41	55	25	33	35	49
600	46		36	47	31	40	48		42		32	43	29	38	44		27	35	38	53
650	49		38	50	34	43	51		44		34	46	31	41	46		28	38	40	56
700	53		40	53	36	46	54		47		37	49	33	43	49		30	40	43	
750	56		43	56	38	48			50		39	51	35	45	52		32	42	45	
800			45		40	51			53		41	54	37	48	55		34	45	48	
850			47		42	53			55		43	57	39	50			35	47	50	
900			49		44	56					45		41	53			37	49	52	
950			52		45						47		42	55			39	51	55	
1000			54		47						49		44				40	53	57	
1100					51						53		48				43			
1200					55						56		51				47			
1300													54				50			
1400																	53			
1500																	56			

Ref. no.	Page
422...	
422841	E.20
422842	E.20
422843	E.20
422844	E.20
422845	E.20
422846	E.20
422847	E.20
422848	E.20
422849	E.22
422850	E.22
422851	E.20
422852	E.20
422853	E.20
422854	E.20
422855	E.20
422856	E.20
422857	E.20
422858	E.20
422859	E.20
422860	E.20
422861	E.20
422862	E.20
422863	E.20
422864	E.20
422865	E.20
422866	E.20
422867	E.20
422868	E.20
422869	E.20
422870	E.20
422871	E.20
422872	E.20
422873	E.20
422874	E.20
422875	E.20
422876	E.20
422877	E.20
422878	E.20
422879	E.20
422880	E.20
422881	E.20
422882	E.20
422883	E.20
422884	E.20
422892	E.22
422893	E.22
422894	E.22
422895	E.21
422895	E.22
422896	E.21
422896	E.22
422897	E.22
422898	E.22
422901	E.22
422902	B.26
422902	E.7
422902	E.10
422902	E.15
422902	E.16
422902	E.22
422906	E.21
422907	E.21
422908	E.21
422909	E.21
422910	E.21
422911	E.21
422912	E.21
422913	E.21
422914	E.21
422915	E.21
422916	E.21
422917	E.21
422918	E.21
424...	
424415	F.3
424416	F.3
424417	F.3
424418	F.3
424419	F.3
424420	F.3
424421	F.3
424422	F.3
424423	F.4
424424	F.4
424425	F.4
424426	F.4
424427	F.4

Ref. no.	Page
424428	F.4
424429	F.4
424430	F.4
424431	F.5
424432	F.5
424433	F.5
424434	F.5
424435	F.5
424436	F.5
424437	F.5
424438	F.5
600...	
600310	A.5
600314	A.5
600346	A.5
600501	A.8
600502	A.8
600504	A.8
600505	A.8
600506	A.8
600507	A.8
600509	A.8
600514	A.7
600515	A.7
600516	A.7
600517	A.7
600523	A.7
600524	A.7
600525	A.8
600526	A.8
600532	A.7
600539	A.7
600543	A.7
600544	A.8
600545	A.8
600650	A.5
600651	A.5
600652	A.5
600656	A.5
600933	A.5
600934	A.5
600945	A.5
600950	A.5
601...	
601222	H.5
601223	H.7
601224	H.7
601225	B.30
601225	H.7
601226	H.7
601227	H.5
601228	H.5
601229	H.5
601230	H.5
601231	H.5
610...	
610017	H.4
610018	H.4
610020	C.29
610020	D.25
610020	H.4
610021	C.29
610021	D.25
610021	H.4
610022	C.29
610022	D.25
610022	H.4
610065	H.4
610130	A.8
610130	H.3
610132	A.8
610132	H.3
610133	A.8
610133	H.3
610142	A.25
610142	B.15
610142	C.11
610142	D.27
610142	H.6
610185	B.15
610185	H.4
610186	A.25
610186	B.15
610186	H.4
610187	A.25
610187	B.15
610187	H.4
610232	C.29

Ref. no.	Page
610233	C.29
610239	C.28
610240	C.28
610241	C.28
610242	C.28
610243	C.28
610244	C.28
610248	C.28
610249	C.28
610257	C.28
610312	H.9
610328	C.28
610329	C.28
610330	C.28
610331	C.28
610332	C.28
610484	A.25
610484	B.15
610484	C.11
617...	
617947	D.36
617992	C.29
617992	H.4
779...	
779201	H.5
779202	H.5
779203	H.5
779204	H.5
779205	H.5
779212	H.5
779213	H.5
779214	H.5
779215	H.5
779216	H.5
779217	H.4
779218	H.4
779219	H.4
779220	H.4
779221	H.4
779222	H.4
779223	H.4
779224	H.4
781...	
781936	A.22
781937	A.22
783...	
783148	B.25
783325	E.9
783326	E.9
783327	E.9
811...	
811263	H.9
811325	C.29
811326	C.29
811327	C.29
811331	C.29
811336	B.31
811336	H.7
811337	B.31
811337	H.7
811338	B.31
811338	H.7
811339	B.31
811339	H.7
811340	B.31
811340	H.7
811341	B.31
811341	H.7
811342	B.31
811342	H.7
811343	B.31
811343	H.7
811363	H.9
811365	H.9
811417	B.30
811417	H.8
811435	B.30
811435	H.9
811438	B.30
811438	H.9
811442	B.30
811442	H.9
811443	B.31
811443	H.9
811446	B.30
811446	H.9
811447	B.30
811447	H.9

Ref. no.	Page
811451	B.30
811451	H.8
811454	B.31
811454	H.7
811455	B.31
811455	H.7
811456	B.31
811456	H.7
811457	B.31
811457	H.7
811458	B.31
811458	H.7
811460	B.31
811460	H.7
811461	B.31
811461	H.7
811462	B.30
811463	B.30
811477	B.31
811477	H.8
811478	B.31
811478	H.8
811479	B.31
811479	H.8
811480	B.31
811480	H.8
811483	B.30
811483	H.8
811516	B.15
811516	C.29
811516	D.27
811516	E.10
811516	E.12
811516	E.17
811516	E.22
811516	H.6
811542	G.4
811619	H.9
813...	
813146	C.29
813156	C.29
815...	
815092	C.29
815093	C.29
815094	C.29
815105	C.29
818...	
818078	G.7
818079	G.5
818080	G.5
818081	G.5
818083	G.6
818091	G.4
818092	G.3
818093	G.3
818094	G.3
818097	G.3
818098	G.3
818099	G.3
818102	G.3
818103	G.3
818104	G.3
818105	G.3
818106	G.3
818107	G.3
818112	H.6
818140	G.10
818141	G.10
818142	G.10
818143	G.10
818144	G.10
818145	G.10
818146	G.10
818162	G.4
818163	G.4
818164	G.4
818165	G.4
818166	G.11
818167	G.11
818168	G.11
818169	G.11
818170	G.11
818171	G.11
818172	G.11
818173	G.11
818174	G.11
818175	G.11
818176	G.11

Ref. no.	Page
818177	G.4
818178	G.4
818179	G.4
818180	G.4
818181	G.10
818182	G.10
818190	G.6
818191	H.6
818192	H.6
818193	G.4
818195	G.10
818196	G.10
818197	G.10
818198	G.10
818199	G.10
818200	G.10
818201	G.10
818202	G.10
818203	G.11
818204	G.11
818205	G.11
818206	G.11
818207	G.11
818208	G.11
818209	G.11
818210	G.11
818211	G.11
818212	G.11
818213	G.11
818217	G.5
818223	G.7
828...	
828031	B.29
828056	A.25
828056	C.10
828056	C.29
828056	D.27
828056	H.6
828059	B.29
828060	B.29
828061	B.29
828062	B.29
828063	B.29
828064	B.29
828145	D.27
828146	D.27
828149	C.29
828152	C.29
828153	C.29
828162	D.24
828163	D.24
828322	C.19
828322	C.21
831...	
831000	B.14
831001	B.14
831003	B.14
831004	B.14
831005	B.14
831006	B.14
831007	B.14
831008	B.14
831009	B.14
831009	G.7
831010	B.14
831018	B.12
831019	B.12
831020	B.12
831021	B.13
831022	B.13
831023	B.13
831025	B.10
831026	B.12
831027	B.12
831028	B.12
831029	B.12
831030	B.12
831034	B.10
831036	B.10
831037	B.12
831038	B.12
831039	B.12
831040	B.12
831041	B.12
831051	B.10
831052	B.10
831053	B.12
831054	B.12

Ref. no.	Page
831055	B.12
831056	B.12
831057	B.12
831064	B.10
831065	B.10
831066	B.12
831067	B.12
831068	B.12
831069	B.12
831070	B.12
831080	B.11
831081	B.11
831082	B.13
831083	B.13
831084	B.13
831085	B.13
831086	B.13
831097	B.11
831098	B.11
831099	B.13
831100	B.13
831101	B.13
831102	B.13
831103	B.13
831111	B.11
831112	B.11
831113	B.13
831114	B.13
831115	B.13
831116	B.13
831117	B.13
831129	B.10
831130	B.10
831131	B.11
831132	B.11
831133	B.11
831152	B.14
831153	B.14
831180	B.14
831284	B.10
831285	B.10
831286	B.11
831287	B.11
831288	B.11
831328	B.15
831328	H.9
831329	B.15
831329	H.9
831330	B.15
831330	H.9
831332	B.12
831333	B.12
831334	B.12
831335	B.12
831336	B.13
831337	B.13
831338	B.13
831790	B.12
831791	B.12
831792	B.12
831793	B.13
831794	B.13
831795	B.13
831796	B.12
831796	B.13
831797	B.12
831797	B.13
831798	B.12
831799	B.12
831800	B.12
831800	B.13
831801	B.12
831801	B.13
831802	B.13
831803	B.13
831809	B.10
831810	B.10
831811	B.11
831812	B.10
831813	B.10
831814	B.11
831815	B.10
831821	B.14
831822	B.14
832...	
832000	B.15
832000	C.29
832000	D.27

Ref. no.	Page
832000	E.10
832000	E.12
832000	E.17
832000	E.22
832000	H.6
832019	B.26
832019	E.10
832019	E.13
832019	E.17
832019	G.7
832022	E.7
832022	E.10
832022	E.12
832022	E.15
832022	E.16
832029	B.14
832029	B.25
832030	B.14
832030	B.25
832031	B.14
832031	B.25
832032	B.14
832032	B.25
832033	B.14
832033	B.25
832034	B.14
832034	B.25
832331	E.15
832465	B.14
832465	B.25
832466	B.14
832466	B.25
832741	B.14
832741	B.25
832741	E.15
832743	G.7
832744	G.7
833...	
833000	B.22
833001	B.22
833004	B.22
833005	B.22
833008	B.22
833009	B.22
833012	B.22
833013	B.22
833016	B.22
833017	B.22
833020	B.23
833021	B.23
833024	B.23
833025	B.23
833028	B.23
833029	B.23
833032	B.23
833036	B.23
833037	B.23
833040	B.23
833041	B.23
833044	B.23
833045	B.23
833052	B.23
833053	B.23
833056	B.23
833057	B.23
833076	B.22
833077	B.22
833085	B.23
833086	B.22
833219	B.22
833264	B.27
833265	B.27
833266	B.27
833267	B.27
833268	B.27
833269	B.27
833270	B.27
833271	B.29
833272	B.29
833274	B.29
833275	B.29
833276	B.29
833277	B.29
833278	B.29
833280	B.29
833281	B.29
833282	B.29
833373	B.22

Ref. no.	Page
833374	B.23
833375	B.23
833376	B.23
833377	B.23
833378	B.23
833379	B.23
833380	B.23
833381	B.23
833385	B.23
833386	B.23
833387	B.23
833500	B.22
833501	B.22
833502	B.22
833503	B.23
833504	B.22
833504	B.23
833505	B.23
833506	B.23
833507	B.23
833508	B.22
833509	B.22
833510	B.22
833511	B.23
833512	B.22
833512	B.23
833513	B.23
833514	B.23
833515	B.23
833516	B.22
833517	B.22
833518	B.22
833519	B.22
833520	B.22
833521	B.23
833522	B.23
833523	B.23
833524	B.23
833525	B.23
833526	B.23
833527	B.23
833528	B.25
833529	B.22
833530	B.22
833530	B.23
833531	B.23
833532	B.23
833533	B.22
833534	B.22
833535	B.23
833536	B.23
833537	B.30
833538	B.30
833539	B.30
833540	B.30
833541	B.30
833542	B.30
833543	B.30
833544	B.30
833545	B.30
833546	B.30
833547	B.30
833548	B.30
833566	B.22
833566	B.23
833568	B.22
833570	B.22
833570	B.23
833572	B.23
833574	B.22
833574	B.23
833575	B.22
833576	B.22
833576	B.23
833577	B.23
833582	B.22
833582	B.23
833583	B.22
833583	B.23
833584	B.22
833585	B.22
833586	B.22
833587	B.22
833588	B.22
833589	B.23
833590	B.23
833591	B.23
833592	B.23

Ref. no.	Page
833593	B.23
833594	B.23
833595	B.23
833624	B.25
833629	B.25
833630	B.25
833649	B.25
833650	B.25
833651	B.25
833655	B.30
833656	B.25
833657	B.25
833658	B.25
833659	B.25
833660	B.25
833661	B.25
833677	A.23
833677	B.26
833677	G.7
833689	B.25
833691	B.25
833692	B.25
833693	B.25
833743	B.25
833764	B.25
833783	B.25
833784	B.25
834...	
834000	B.5
834001	B.5
834002	B.5
834003	B.5
834004	B.5
834005	B.5
834006	B.5
834007	B.5
834008	B.5
834009	B.5
834010	B.5
834011	B.5
834012	B.5
834013	B.5
834014	B.5
834015	B.5
834016	B.5
834017	B.5
834018	B.5
834019	B.5
834020	B.5
834021	B.5
834022	B.5
834023	B.5
834024	B.5
834025	B.5
834026	B.5
834027	B.5
834028	B.5
834029	B.5
834030	B.5
834031	B.5
834032	B.5
834033	B.5
834034	B.5
834035	B.5
834036	B.5
834037	B.5
834038	B.5
834039	B.5
834040	B.5
834041	B.5
834042	B.5
841...	
841016	E.5
841017	E.5
841018	E.5
841022	E.5
841023	E.5
842...	
842000	E.7
842001	E.7
842002	E.7
842004	E.7
842072	E.7
842073	E.7
842074	E.7
842075	E.7
842082	E.7
842083	E.7

Ref. no.	Page
842084	E.7
842085	E.7
842098	E.17
842099	E.9
842099	E.17
842100	B.22
842100	B.23
842100	E.9
842100	E.17
842101	B.22
842101	B.23
842101	E.9
843...	
843000	B.14
843001	D.35
843001	E.7
843001	E.10
843001	E.12
843001	E.15
843001	E.16
843002	D.35
843002	E.7
843002	E.10
843002	E.12
843002	E.16
843003	D.35
843003	E.7
843003	E.10
843003	E.12
843003	E.16
843010	E.11
843011	E.11
843024	E.9
843024	E.13
843031	E.11
843035	E.11
843043	E.11
843044	E.9
843044	E.13
843049	E.11
843055	E.11
843057	E.9
843057	E.13
843063	E.11
843066	E.11
843067	E.9
843069	E.11
843070	E.9
843070	E.13
843071	E.9
843071	E.13
843072	E.9
843072	E.13
843075	E.11
843080	E.11
843101	E.11
843104	E.11
843108	E.11
843117	E.11
843120	E.11
843122	E.11
843124	E.11
843125	E.9
843127	E.9
843128	E.9
843129	E.9
843144	E.9
843150	E.9
843151	E.9
843152	E.9
843153	E.9
843154	E.9
843155	E.9
843156	E.9
843157	E.9
843158	E.9
843160	E.9
843162	E.9
843164	E.9
843176	E.9
843177	E.9
843178	E.9
843179	E.9
843180	E.9
843181	E.9
843182	E.9
843183	E.9
843248	D.35

Ref. no.	Page
843248	E.7
843248	E.10
843248	E.12
843248	E.16
843250	E.13
843256	E.9
843296	E.13
843299	E.17
843300	E.9
843300	E.17
843301	E.9
843301	E.17
843302	E.9
843303	E.9
843304	E.7
843304	E.10
843304	E.12
843304	E.16
843313	E.9
843314	E.9
843315	E.9
843316	E.9
843317	E.9
843318	E.9
843319	E.9
843320	E.9
843356	E.13
843357	E.13
843358	E.13
843359	E.13
843360	E.13
843369	E.11
843394	E.13
843396	E.13
843397	E.13
843399	E.13
843400	E.13
843402	E.13
843408	E.13
843409	E.13
843410	E.13
843411	E.13
843413	E.13
843425	E.13
843435	B.14
843435	B.25
843440	E.17
843441	E.9
843441	E.17
843442	E.9
843442	E.17
843443	E.9
843444	E.9
843445	E.11
843447	E.11
843452	E.11
843480	E.9
843481	E.9
843482	E.9
843483	E.9
843484	E.9
843485	E.9
843486	E.9
843487	E.9
843504	E.11
843505	E.11
843510	E.11
843511	E.11
843515	E.11
843516	E.11
843517	E.11
843518	E.11
843519	E.11
843521	E.11
843523	E.11
843524	E.11
843526	E.11
843527	E.11
843528	E.11
843530	E.11
843531	E.11
843533	E.11
843535	E.11
843536	E.11
843538	E.11
843539	E.11
843540	E.11
843542	E.11

Ref. no.	Page
843543	E.11
843545	E.11
843547	E.11
843548	E.11
843550	E.11
843551	E.11
843552	E.11
843554	E.11
843564	E.11
843576	E.10
844...	
844000	E.17
844001	E.17
844003	E.17
844016	E.17
844020	E.17
844039	E.10
844039	E.16
844049	E.17
844050	E.17
844053	E.17
844057	E.17
844065	E.17
844068	E.17
844070	E.17
844071	E.17
844074	E.17
844081	E.17
844093	E.17
844095	E.17
844114	E.17
844130	E.15
844131	E.15
844132	E.15
844133	E.15
844134	E.15
844135	E.15
844152	E.15
844153	E.15
844154	E.15
844185	E.15
844186	E.15
846...	
846016	E.10
846017	E.10
846018	E.10
851...	
851016	A.24
851016	E.5
851021	H.4
851026	A.24
851027	A.24
851046	A.5
851096	H.3
851097	H.3
851098	H.3
851099	H.3
851100	H.3
851103	A.23
851105	A.22
851106	A.23
851110	A.22
851111	A.22
851112	A.23
851117	H.4
851118	H.4
851120	H.4
851121	H.4
851123	H.9
851125	C.20
851125	H.4
851129	H.4
851170	A.21
851171	A.21
851172	H.4
851173	A.20
851176	A.20
851180	A.20
851181	A.20
851185	A.20
851186	A.20
851187	A.20
851188	A.20
851189	A.20
851190	A.20
851191	A.20
851192	H.4
851193	A.21

Ref. no.	Page
851196	A.20
851244	H.6
851249	C.17
851253	C.17
851254	C.17
851255	A.24
851256	A.24
851258	A.24
851259	A.24
851260	A.24
851262	A.24
851266	A.23
851268	A.24
851277	A.20
851278	A.20
851279	A.20
851281	A.20
851282	A.21
851283	A.21
851286	A.21
851287	A.21
851289	A.21
851290	A.21
851292	A.21
851321	A.25
851321	B.15
851321	C.10
851321	H.6
851325	H.4
851326	A.25
851330	A.25
851336	A.25
851338	A.25
851345	A.25
851347	A.25
851353	A.25
851358	A.25
851371	A.24
851372	E.16
851384	C.10
851385	C.10
851415	C.17
851650	H.2
851651	H.2
851652	A.5
851652	H.2
851653	H.2
851654	H.2
851655	H.2
851656	H.2
851657	H.2
851658	H.2
851659	H.2
851660	H.2
851661	H.2
851662	H.2
851663	H.2
851664	H.2
851665	H.2
851666	H.2
851667	H.2
851668	H.2
851669	H.2
851670	H.2
851671	H.2
851672	H.2
851673	H.2
851674	A.5
851674	H.2
851675	H.2
851676	H.2
851680	H.3
851681	H.3
851682	H.3
851683	H.3
851684	H.3
851685	H.3
851686	H.3
851687	H.3
851688	H.3
851689	H.3
851690	H.3
851691	H.3
851692	H.3
851693	H.3
851694	H.3
851695	H.3
851696	H.3

Ref. no.	Page
851697	H.3
851698	H.3
852...	
852003	A.24
852003	E.7
852004	A.24
852015	A.24
852016	A.24
852020	A.23
852021	A.23
852022	A.23
852023	A.23
852024	A.23
852025	A.23
852057	A.20
852079	A.20
852090	A.21
852091	A.21
852092	A.21
852095	A.21
852117	A.21
852135	A.20
852174	A.21
852178	A.21
852191	H.3
852280	A.21
852283	A.25
852436	A.21
852446	A.21
852451	A.21
852874	A.20
852875	A.20
852876	A.20
852877	A.20
852878	A.21
852879	A.21
852880	A.21
852881	A.21
852882	A.21
853...	
853000	C.8
853001	C.8
853002	C.8
853003	C.8
853004	C.8
853005	C.8
853006	C.8
853007	C.8
853008	C.8
853009	C.8
853010	C.8
853011	C.8
853012	C.8
853013	C.8
853014	C.8
853015	C.8
853016	C.8
853017	C.9
853020	C.9
853027	C.9
853030	C.8
853031	C.8
853032	C.8
853033	C.8
853034	C.8
853035	C.9
853036	C.9
853037	C.9
853053	C.11
853054	C.11
853055	C.9
853056	C.11
853057	C.10
853058	C.10
853059	C.9
853060	C.9
853061	C.10
853062	C.9
853063	C.9
853064	C.10
853065	C.10
853066	C.10
853067	C.10
853068	C.8
853069	C.8
853070	C.8
853071	C.8
853072	C.8

Ref. no.	Page
853073	C.9
853074	C.9
853075	C.19
853076	C.19
853077	C.19
853082	C.9
853083	C.9
853094	C.10
853095	C.10
853096	C.10
853097	C.10
853098	C.10
853099	C.10
853100	C.10
853101	C.10
853102	C.10
853103	C.8
853104	C.8
853105	C.8
853106	C.8
853107	C.8
853113	C.8
853114	C.8
853115	C.8
853116	C.8
853117	C.8
853123	C.10
853124	C.12
853125	C.12
853126	C.12
853127	C.12
853128	C.12
853129	C.12
853130	C.12
853131	C.12
853132	C.14
853133	C.14
853134	C.14
853135	C.14
853136	C.14
853137	C.15
853138	C.15
853139	C.15
853140	C.13
853141	C.13
853159	C.12
853160	C.12
853161	C.12
853162	C.15
853163	C.15
853164	C.15
853165	C.15
853166	C.15
853167	C.15
853168	C.15
853170	C.13
853256	C.17
853266	C.12
853267	C.12
853268	C.12
853269	C.10
853340	C.10
853865	C.16
853866	C.16
853867	C.16
853868	C.16
853869	C.16
853870	C.16
853871	C.16
853872	C.16
853873	C.16
853874	C.15
853875	C.15
853876	C.13
853877	C.13
853878	C.13
853879	C.13
854...	
854103	A.21
855...	
855009	C.8
855010	C.8
855011	C.8
855012	C.8
855013	C.8
855029	C.9
855030	C.9
855032	C.9

Ref. no.	Page
855033	C.9
855034	C.9
855035	C.9
855036	C.9
855037	C.9
855038	C.9
855084	C.10
855085	C.14
855087	C.14
855088	C.14
856...	
856000	A.20
856001	A.20
856002	A.20
856003	A.20
856004	A.21
856005	A.21
856006	A.21
856007	A.21
856008	A.21
856009	A.20
856010	A.20
856011	A.20
856012	A.21
856013	A.21
856014	A.21
856015	A.21
856016	A.21
856017	A.20
856018	A.20
856019	A.20
856020	A.21
856021	A.21
856022	A.21
856023	A.21
856024	A.21
856025	A.20
856026	A.20
856027	A.20
856028	A.20
856029	A.21
856030	A.21
856031	A.21
856032	A.21
856033	A.21
856034	A.20
856035	A.20
856036	A.20
856037	A.21
856038	A.21
856039	A.21
856040	A.20
856041	A.20
856042	A.20
856043	A.20
856044	A.21
856045	A.21
856046	A.21
856047	A.21
856048	A.18
856049	A.18
856050	A.18
856051	A.18
856052	A.19
856053	A.19
856054	A.19
856055	A.19
856056	A.19
856057	A.18
856058	A.18
856059	A.18
856060	A.18
856061	A.19
856062	A.19
856063	A.19
856064	A.19
856065	A.19
856066	A.18
856067	A.18
856068	A.18
856069	A.19
856070	A.19
856071	A.18
856072	A.18
856073	A.18
856074	A.18
856075	A.19
856076	A.19

Ref. no.	Page
856077	A.19
856078	A.19
856079	A.19
856080	A.18
856081	A.18
856082	A.18
856083	A.19
856084	A.19
856085	A.19
856086	A.19
856096	A.22
856097	A.22
856098	A.22
856099	A.22
856100	A.22
856101	A.22
856102	A.22
856103	A.22
856104	A.22
856105	A.22
856106	A.22
856107	A.22
856108	A.22
856109	A.24
856110	A.24
856111	A.24
856112	A.24
856113	A.24
856114	A.24
856115	A.22
856116	A.22
856117	A.22
856118	A.22
856119	A.26
856120	A.26
856121	A.26
856122	A.26
856123	A.26
856124	A.26
856125	A.26
856126	A.26
856127	A.26
856128	A.27
856129	A.27
856130	A.27
856131	A.22
858...	
858003	C.22
858004	C.22
858005	C.22
858006	C.22
858007	C.22
858008	C.22
858010	C.22
858011	C.22
858013	C.22
858025	C.20
858026	C.20
858026	C.22
858027	C.20
858028	C.20
858028	C.22
858029	C.20
858030	C.20
858031	C.20
858032	C.20
858032	C.22
858033	C.20
858033	C.22
858034	C.20
858034	C.21
858035	C.20
858035	C.21
858036	C.20
858036	C.21
858036	D.23
858037	C.20
858037	C.21
858038	C.20
858038	C.21
858039	C.20
858039	C.21
861...	
861395	H.6
861396	H.6
861397	H.6
861398	H.6
861399	H.6

Ref. no.	Page
861500	A.11
861501	A.11
861502	A.11
861503	A.11
861504	A.11
861505	A.11
861506	A.11
861507	A.11
861508	A.11
861509	A.11
861510	A.11
861511	A.11
861512	A.11
861513	A.11
861514	A.11
861515	A.11
861516	A.11
861517	A.11
861518	A.11
861519	A.11
861520	A.11
861521	A.11
861522	A.11
861523	A.11
861524	A.11
861525	A.11
861526	A.11
861527	A.11
861528	A.12
861529	A.12
861530	A.12
861531	A.12
861532	A.12
861533	A.12
861534	A.12
861535	A.12
861536	A.12
861537	A.12
861538	A.12
861539	A.12
861542	A.12
861543	A.12
861544	A.12
861545	A.12
861546	A.12
861547	A.12
861550	A.12
861551	A.12
861552	A.12
861553	A.12
861556	A.11
861557	A.11
861558	A.11
861559	A.11
861560	A.11
861561	A.11
861562	A.11
861563	A.11
861564	A.11
861565	A.11
861566	A.11
861567	A.11
861568	A.11
861569	A.11
861570	A.11
861571	A.11
861572	A.11
861573	A.11
861574	A.11
861575	A.11
861576	A.11
861577	A.11
861578	A.11
861579	A.11
861580	A.11
861581	A.11
861582	A.11
861583	A.11
861584	A.12
861585	A.12
861586	A.12
861587	A.12
861588	A.12
861589	A.12
861590	A.12
861591	A.12
861592	A.12
861593	A.12

Ref. no.	Page
861594	A.12
861595	A.12
861598	A.12
861599	A.12
861600	A.12
861601	A.12
861602	A.12
861603	A.12
861606	A.12
861607	A.12
861608	A.12
861609	A.12
861612	A.11
861613	A.11
861614	A.11
861615	A.11
861616	A.11
861617	A.11
861618	A.11
861619	A.11
861620	A.11
861621	A.11
861622	A.11
861623	A.11
861624	A.11
861625	A.11
861626	A.11
861627	A.11
861628	A.11
861629	A.11
861630	A.11
861631	A.11
861632	A.11
861633	A.11
861634	A.11
861635	A.11
861636	A.11
861637	A.11
861638	A.11
861639	A.11
861640	A.12
861641	A.12
861642	A.12
861643	A.12
861644	A.12
861645	A.12
861646	A.12
861647	A.12
861648	A.12
861649	A.12
861650	A.12
861651	A.12
861654	A.12
861655	A.12
861656	A.12
861657	A.12
861658	A.12
861659	A.12
861662	A.12
861663	A.12
861664	A.12
861665	A.12
861668	A.11
861669	A.11
861670	A.11
861671	A.11
861672	A.11
861673	A.11
861674	A.11
861675	A.11
861676	A.11
861677	A.11
861678	A.11
861679	A.11
861680	A.11
861681	A.11
861682	A.11
861683	A.11
861684	A.11
861685	A.11
861686	A.11
861687	A.11
861688	A.11
861689	A.11
861690	A.11
861691	A.11
861692	A.11
861693	A.11

Ref. no.	Page
861694	A.11
861695	A.11
861696	A.12
861697	A.12
861698	A.12
861699	A.12
861700	A.12
861701	A.12
861702	A.12
861703	A.12
861704	A.12
861705	A.12
861706	A.12
861707	A.12
861710	A.12
861711	A.12
861712	A.12
861713	A.12
861714	A.12
861715	A.12
861718	A.12
861719	A.12
861720	A.12
861721	A.12
861724	A.13
861725	A.13
861726	A.13
861727	A.13
861728	A.13
861728	G.7
861730	A.11
861731	A.11
861732	A.11
861733	A.11
861734	A.11
861735	A.11
861736	A.11
861737	A.12
861738	A.12
861739	A.12
861740	A.12
861741	A.11
861742	A.11
861743	A.11
861744	A.11
861745	A.11
861746	A.11
861747	A.11
861748	A.11
861748	A.12
861749	A.12
861750	A.12
861753	A.13
861754	A.13
861755	A.13
861756	A.13
861757	A.13
861758	A.13
861759	A.13
861760	A.13
861761	A.13
861762	A.13
861763	A.13
861764	A.13
861765	A.13
861769	A.13
861770	A.13
861775	A.15
861776	A.15
861777	A.15
861778	A.15
861779	A.15
861780	A.15
861781	A.15
861782	A.15
861783	A.15
861784	A.15
861785	A.15
861786	A.15
861787	A.15
861788	A.15
861789	A.15
861790	A.15
861791	A.15
861792	A.15
861793	A.15
861794	A.15
861795	A.15

Ref. no.	Page
861796	A.15
861797	A.15
861798	A.15
861798	B.5
861799	A.15
861799	B.5
861800	A.15
861800	B.5
861801	A.15
861802	A.15
861803	A.15
861803	B.5
861804	A.15
861804	B.5
861805	A.15
861805	B.5
861806	A.15
861806	B.5
861807	A.15
861808	A.15
861809	A.15
861809	B.5
861810	A.15
861810	B.5
861811	A.15
861811	B.5
861812	A.15
861812	B.5
861813	A.15
861813	B.5
861814	A.15
861814	B.5
861815	A.15
861815	B.5
861816	A.15
861817	A.15
861818	A.15
861818	B.5
861819	A.15
861819	B.5
861820	A.15
861820	B.5
861821	A.15
861822	A.15
861823	A.15
861825	A.15
866...	
866001	H.6
866002	H.6
866003	H.6
870...	
870384	C.16
872...	
872350	D.42
880...	
880614	D.25
880617	D.23
880617	D.48
880617	D.49
880619	D.48
880637	D.24
880638	D.24
880639	D.24
880742	D.25
880846	D.48
880847	D.23
880847	D.48
880847	D.49
880850	D.48
880850	D.49
880850	D.23
880851	D.23
880851	D.48
880851	D.49
880852	D.23
880852	D.48
880852	D.49
880884	D.18
880885	D.18
880886	D.18
880887	D.18
880888	D.18
880889	D.18
880890	D.18
880891	D.18
880892	D.18
880893	D.18
880894	D.18

Ref. no.	Page
880895	D.18
880896	D.18
880926	D.18
880927	D.18
880928	D.18
880929	D.18
880930	D.18
880931	D.18
880932	D.18
880933	D.18
880934	D.49
880935	D.49
880936	D.49
880937	D.49
880938	D.49
880954	D.20
880955	D.20
883...	
883059	D.50
883060	D.50
883163	D.44
883164	D.44
883663	D.47
883664	D.47
883665	D.47
883666	D.47
883667	D.47
883669	D.47
883670	D.47
883671	D.47
883672	D.47
883673	D.47
883758	D.37
883759	D.37
883760	D.37
883761	D.37
883762	D.37
883763	D.37
883764	D.37
883765	D.37
883766	D.36
883767	D.37
883768	D.37
883769	D.37
883770	D.37
883771	D.37
883772	D.37
883773	D.37
883774	D.37
883775	D.37
883776	D.36
883777	D.37
883778	D.36
883779	D.36
883780	D.36
883781	D.36
883782	D.37
883783	D.37
883788	D.37
883789	D.37
883851	D.41
883852	D.41
883853	D.41
883854	D.41
883855	D.41
883856	D.41
883857	D.41
883859	D.41
883861	D.37
883862	D.37
883863	D.37
883864	D.37
883874	D.37
883878	D.37
883943	D.37
883944	D.37
883950	D.38
883951	D.39
883952	D.40
883953	D.40
883954	D.40
883955	D.38
883956	D.39
883957	D.38
883957	D.39
883958	D.38
883958	D.39
883959	D.38

Ref. no.	Page
883960	D.39
883961	D.40
883962	D.40
883963	D.40
883964	D.38
883965	D.39
883966	D.38
883967	D.39
883968	D.38
883969	D.39
883970	D.38
883970	D.39
883972	D.40
883973	D.38
883974	D.39
883975	D.38
883976	D.39
883977	D.40
883979	D.40
883981	D.40
883982	D.40
883983	D.38
883984	D.39
883985	D.38
883986	D.39
883987	D.38
883988	D.39
883989	D.38
883990	D.39
883991	D.38
883992	D.39
883993	D.38
883994	D.39
883996	D.38
883996	D.39
883997	D.36
883998	D.36
883999	D.40
884...	
884000	D.34
884001	D.34
884002	D.34
884003	D.34
884004	D.34
884005	D.34
884006	D.34
884007	D.34
884008	D.34
884009	D.34
884010	D.34
884011	D.34
884012	D.34
884013	D.34
884014	D.34
884018	D.34
884019	D.34
884020	D.34
884021	D.34
884022	D.34
884026	D.34
884027	D.34
884028	D.34
884029	D.34
884030	D.34
884031	D.34
884032	D.34
884033	D.34
884034	D.34
884035	D.34
884036	D.34
884037	D.34
884042	D.44
884043	D.44
884044	D.44
884045	D.44
884048	D.35
884049	D.35
884050	D.35
884050	D.47
884051	D.35
884051	D.47
884052	D.35
884052	D.47
884053	D.35
884053	D.47
884054	D.35
884054	D.47
884055	D.35

Ref. no.	Page
884055	D.48
884056	D.35
884056	D.48
884057	D.35
884058	D.35
884058	D.49
884059	D.35
884060	D.35
884061	D.41
884062	D.41
884063	D.41
884064	D.41
884065	D.43
884066	D.43
884067	D.43
884068	D.43
884069	D.44
884070	D.44
884071	D.44
884072	D.44
884073	D.38
884074	D.38
884075	D.38
884076	D.40
884077	D.40
884078	D.42
884079	D.34
884080	D.34
884081	D.37
884082	D.37
884083	D.37
884084	D.37
884085	D.37
884087	D.37
884088	D.37
884089	D.44
884090	D.44
884091	D.44
884092	D.44
884093	D.42
884094	D.42
884095	D.42
884096	D.42
884097	D.42
884098	D.42
884099	D.42
884101	D.42
884102	D.42
884115	D.42
884119	D.42
884120	D.42
884121	D.42
884122	D.35
884123	D.43
884124	D.43
884125	D.43
884128	D.43
885...	
885000	D.13
885001	D.13
885002	D.13
885003	D.13
885004	D.13
885005	D.13
885006	D.13
885007	D.13
885008	D.13
885009	D.13
885010	D.13
885011	D.13
885012	D.13
885013	D.13
885014	D.13
885015	D.13
885016	D.13
885017	D.15
885018	D.15
885019	D.15
885020	D.13
885021	D.13
885022	D.13
885023	D.13
885024	D.13
885025	D.13
885026	D.13
885027	D.13
885028	D.13
885029	D.13

Ref. no.	Page
885030	D.13
885031	D.13
885032	D.13
885033	D.13
885034	D.13
885035	D.13
885036	D.13
885037	D.13
885038	D.13
885039	D.13
885040	D.13
885041	D.13
885042	D.13
885043	D.13
885044	D.13
885045	D.13
885046	D.13
885047	D.13
885048	D.13
885049	D.13
885050	D.13
885051	D.13
885052	D.13
885053	D.13
885054	D.13
885055	D.13
885056	D.13
885057	D.13
885058	D.13
885059	D.13
885060	D.13
885061	D.13
885062	D.13
885063	D.13
885064	D.13
885065	D.13
885066	D.13
885067	D.13
885068	D.13
885069	D.13
885070	D.13
885071	D.13
885072	D.13
885073	D.13
885074	D.13
885075	D.13
885076	D.13
885077	D.13
885078	D.13
885079	D.13
885080	D.13
885081	D.13
885082	D.13
885083	D.13
885084	D.13
885084	D.16
885085	D.13
885085	D.16
885086	D.13
885086	D.16
885087	D.16
885088	D.16
885089	D.16
885090	D.16
885091	D.16
885092	D.16
885093	D.16
885094	D.16
885095	D.16
885096	D.17
885097	D.17
885098	D.17
885099	D.17
885100	D.17
885101	D.17
885102	D.17
885103	D.17
885104	D.17
885105	D.17
885114	D.20
885115	D.20
885116	D.20
885117	D.20
885118	D.20
885119	D.20
885120	D.20
885121	D.20
885122	D.20

Ref. no.	Page
885123	D.20
885124	D.20
885125	D.20
885126	D.24
885127	D.20
885128	D.20
885129	D.20
885130	D.20
885131	D.20
885132	D.20
885133	D.20
885134	D.20
885135	D.20
885136	D.21
885137	D.21
885138	D.17
885139	D.21
885140	D.21
885141	D.21
885142	D.21
885143	D.21
885144	D.21
885145	D.21
885146	D.21
885147	D.21
885148	D.21
885149	D.17
885150	D.17
885151	D.17
885152	D.17
885153	D.17
885154	D.17
885155	D.26
885156	D.26
885157	D.26
885158	D.26
885159	D.26
885160	D.26
885161	D.26
885162	D.26
885163	D.26
885164	D.26
885165	D.26
885166	D.26
885167	D.26
885168	D.26
885169	D.26
885170	D.26
885171	D.26
885172	D.26
885173	D.26
885174	D.26
885175	D.26
885176	D.26
885177	D.26
885178	D.26
885179	D.26
885180	D.26
885181	D.26
885182	D.26
885183	D.26
885184	D.26
885185	D.26
885186	D.26
885187	D.26
885188	D.26
885189	D.26
885190	D.26
885191	D.22
885192	D.22
885193	D.22
885194	D.22
885195	D.22
885196	D.22
885197	D.22
885198	D.22
885199	D.22
885200	D.24
885201	D.24
885202	D.24
885203	D.24
885204	D.23
885205	D.23
885206	D.23
885207	D.23
885208	D.23
885209	D.23
885210	D.23

Ref. no.	Page
885211	D.24
885212	D.25
885213	D.25
885214	D.25
885215	D.25
885217	D.25
885220	D.25
885221	D.25
885223	D.25
885224	D.25
885225	D.24
885226	D.24
885227	D.24
885228	D.16
885229	D.16
885230	D.16
885231	D.16
885232	D.16
885233	D.16
885234	D.16
885235	D.15
885236	D.15
885237	D.15
885238	D.15
885239	D.15
885240	D.15
885240	D.27
885241	D.17
885241	D.27
885242	D.17
885242	D.27
885243	D.17
885243	D.27
885244	D.27
885245	D.27
885246	D.27
885247	D.27
885248	D.27
885249	D.27
885250	D.27
885251	D.27
885252	D.27
885253	D.27
885254	D.27
885256	D.27
885257	D.27
885258	D.27
885259	D.27
885260	D.27
885261	D.24
885262	D.24
885263	D.24
885264	D.17
885265	D.18
885266	D.18
885267	D.18
885282	D.27
885283	D.27
885284	D.27
885285	D.27
885286	D.27
885288	D.27
885289	D.24
885290	D.24
885291	D.24
885292	D.24
885295	D.27
885300	D.27
885302	D.27
885303	D.27
885304	D.27
885306	D.27
885307	D.27
885308	D.27
885310	D.27
885311	D.27
885312	D.27
885313	D.27
885314	D.27
886...	
886530	D.24
886532	D.24
890...	
890510	A.23
890700	A.9
890701	A.9
890704	H.5
890705	H.5

Ref. no.	Page
890706	A.9
890728	A.9
890729	A.9
890761	A.9
890800	H.7
890801	H.7
890802	H.7
890803	H.7
890804	H.7
890805	H.7
890806	H.7
890807	H.7
890808	H.7
890809	H.10
890810	H.10
890811	H.10
890812	H.10
890813	H.10
890814	H.10
890815	H.10
890816	H.10
890817	H.10
890818	H.10
890819	H.10
890820	H.10
890821	H.10
890822	H.10
890823	H.10
890824	H.10
890825	H.10
890826	H.10
890827	H.10
890828	H.10
890829	H.10
890830	H.10
890831	H.10
890832	H.10
890833	H.10
890834	H.10
890835	H.10
890836	H.10
890837	H.6
890838	A.8
890838	H.5
890839	H.10
890840	H.10
890841	H.10
890842	H.10
890843	H.10
890844	H.10
890845	E.10
890845	E.16
890846	E.7
890847	H.9
890848	H.9
890849	H.10
890850	H.10
890851	E.16
891...	
891608	B.15
891854	B.15
891854	B.26

The policy of GE Industrial Solutions is one of continuous improvement.
The right is reserved to alter the design or any structural details of the products at any time without giving notice.

October, 2011
GE Industrial Solutions

Notes

Notes

GE Energy
Industrial Solutions

Industrial Solutions, a division of GE Energy, is a first class global supplier of low and medium voltage products including wiring devices, residential and industrial electrical distribution components, automation products, enclosures and switchboards.
Worldwide demand for GE Industrial Solutions' products comes from wholesalers, installers, panelboard builders, contractors, OEMs and utilities.

www.ge.com/ex/industrialsolutions
www.ge.com/eu/industrialsolutions

GE Energy Industrial Solutions
Houghton Centre
Salthouse Road
Blackmills
Northampton
NN4 7EX
United Kingdom

Customer Service UK
Tel. 0800 587 1239
Fax 0800 587 1251
E-mail: order.consind@ge.com

General Electric International, Inc
1101, City Tower 2, Sheikh Zayed Road
P.O. Box 11549, Dubai
United Arab Emirates
Tel. +9714 313 1202

Customer Service MEA
Tel. +361 447 6046
Fax +361 447 5060
E-mail: mea.export.consind@ge.com

GE Energy Industrial Solutions
Nieuwevaart 51
B-9000 Gent
Belgium
Tel. +32 9 265 21 11
E-mail: gepcbel@gepc.ge.com

GE imagination at work

680800
Ref. E/5405/E/EX 3.5 Ed. 09/11
© Copyright GE Industrial Solutions, 2011