Measuring Devices and Power Management

Configuration Manual · 2012

SENTRON

Answers for infrastructure.

SIEMENS

Measuring Devices and Power Management

11

Technical information

can be found at
www.siemens.com/lowvoltage/support

under Product List:
- Technical Specifications

under Entry List:
- Updates
- Download
- FAQ
- Manuals
- Characteristics
- Certificates

and at
www.siemens.com/lowvoltage/configurators
- Configurators

PC-based power management system

Overview

Components of the PC-based power management system

User interface of powermanager

Power management system with the product family

The product family offers the user not only power management software in the form of powermanager, but also the corresponding hardware in the form of 7KM PAC measuring devices and 3WL/3VL circuit breakers for the realization of a complete power management system.

The components are optimally coordinated with each other. For example, special drivers for devices are integrated in the powermanager software so that on the one hand the power data acquisition can take place without any great configuration effort and, on the other hand, the most important measured values or states are indicated by predefined displays.

This reduces the engineering work for the customer and gives the user the assurance of knowing that the device functions are optimally supported in the software.

Power management software powermanager

The power management software powermanager is at the heart of the PC-based power management system and

- is independent power management software
- can be operated using a PC and measuring devices with Ethernet connection.
- is expandable from the simple standard application to a fully flexible customer solution.
- is fully scalable with regard to the number of devices and to the software's functions
- ensures the optimum integration of measuring devices from the 7KM PAC range, 3WL/3VL circuit breakers and other devices.

The powermanager power management software includes a client/server installation for recording, preparing, displaying and archiving power data. These power data are supplied primarily by 7KM PAC measuring devices or 3WL/3VL circuit breakers, which are connected to the system through Ethernet.

The powermanager software is available as "Expert", "Web" and "Distributed Systems" option packs.

Benefits

- Transparency of power flows
- Exact knowledge of the consumption profile
- Increase of power efficiency
- Optimization of power supply contracts
- Compliance with contractual terms
- Assignment of power costs to cost centers
- Optimization of plant maintenance
- Identification of critical plant conditions

Application

The PC-based power management system is used wherever power flows need to be transparently displayed and monitored.

Industries

Energy efficiency thanks to power management with consistent monitoring and the resulting optimization measures is important for all industries, e. g. in the manufacturing industry, in non-residential buildings, in the field of services, and in infrastructure projects. This has a particular impact on competitiveness, particularly in view of rising energy prices.

System configuration with powermanager

- Integration of measuring devices by means of predefined device templates for the 7KM PAC family and the 3WL/3VL circuit breakers
- Easy integration of existing modbus-capable detecting devices
- Communication through Standard Ethernet
- Integration of devices with RS485 interface (ModbusRTU) through Modbus gateway, e. g. the 7KM PAC4200 can be used as gateway

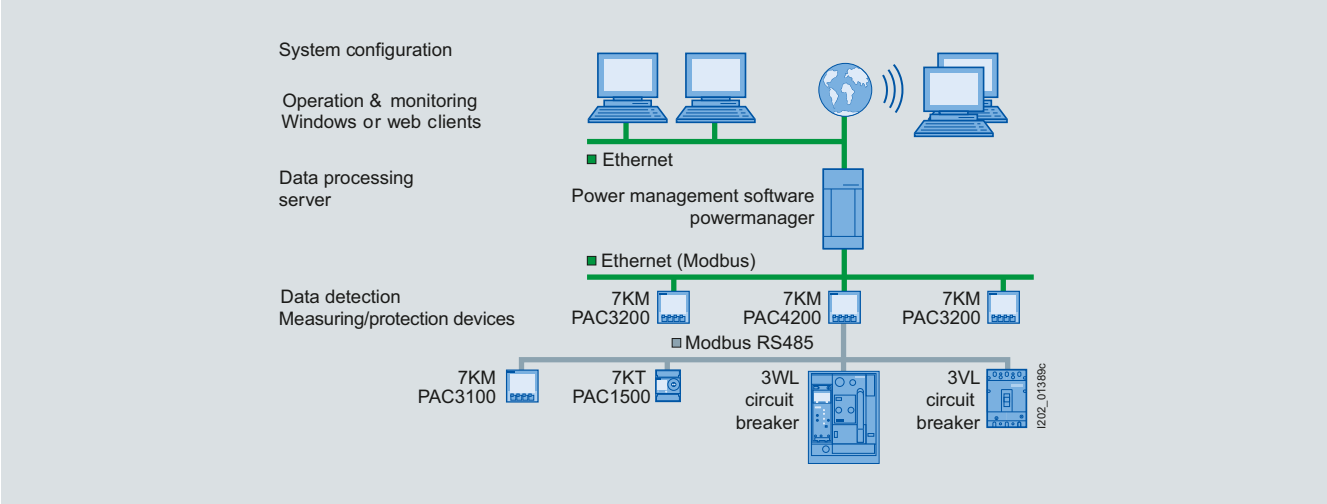

System overview

More information

Hardware components

The hardware components of the PC-based power management system are as follows:

- the 7KM PAC measuring devices in this chapter or in Catalog LV 10.1 · 2012, chapter 11
- the 3WL air circuit breakers in Catalog LV 10.1 · 2012, chapter 1
- the 3VL molded case circuit breakers in Catalog LV 10.1 · 2012, chapter 2

Software

The software for the PC-based power management system is powermanager, see Catalog LV 10.1 · 2012, chapter 13, Section "Configuring, visualizing and controlling with SENTRON".

Internet

You can find more information on the Internet at:
www.siemens.com/lowvoltage/energymanagement

SIMATIC-based power management system

Overview

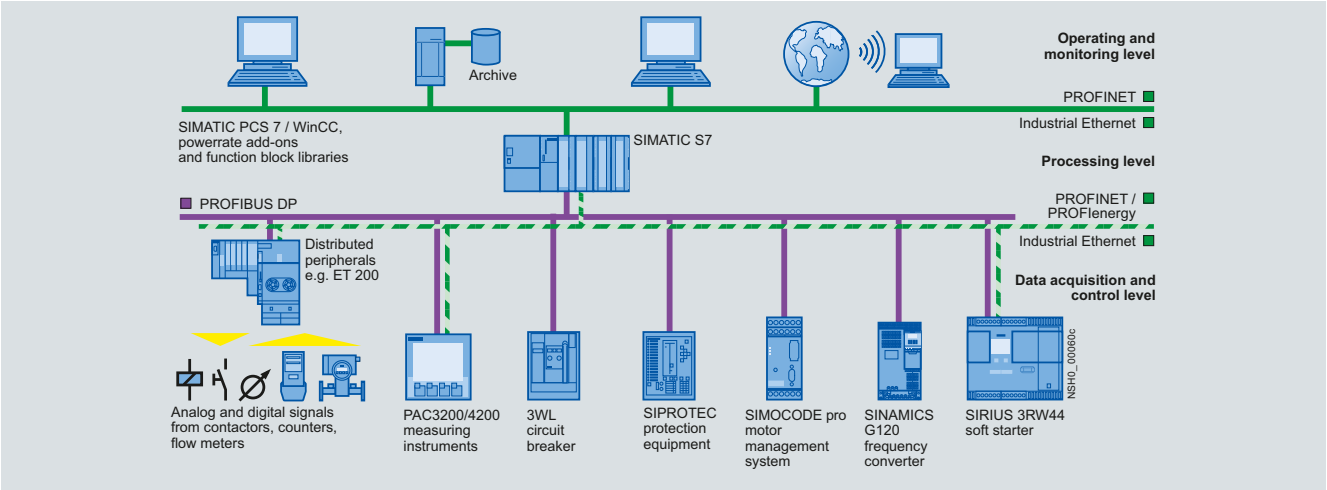

SIMATIC-based solutions for the process and manufacturing industry

Besides the high level of automation, a key feature of the process and manufacturing industry is a very high power consumption. It is only natural, therefore, to integrate an power management system in the existing systems.
The add-on SIMATIC powerrate for WinCC and PCS 7 makes it possible to provide transparency and control in power distribution and energy costs.

Integration of switching, safety and measuring devices

For complete integration of low-voltage power distribution components in process and SCADA systems, PROFIBUS DP interfaces and function block libraries are available, e. g. the PAC3200 function block library for SIMATIC WinCC and PCS 7. The software add-ons can therefore be used to display all the data supplied from the devices without major engineering work.

PROFINET and PROFIenergy

An increasing number of devices in automation technology offer PROFINET. There is also a Switched Ethernet PROFINET module for the 7KM PAC3200 and PAC4200 measuring device. PROFIenergy is a "Common Application Profile" from the PNO. Thanks to PROFIenergy it is possible to assemble an power management system with standardized device interfaces.

SIMATIC powerrate

The SIMATIC powerrate software is at the heart of the SIMATIC-based power management system and

- is an add-on to PCS 7 and WinCC which throws light on power consumption from the infeed to the load.
- continuously collects, archives and processes power data
- creates a load profile and works out potential savings based on exact knowledge of the load profile.
- monitors the contractually agreed power limit.
- enables the exact recording and evaluation of power consumption per batch through batch-related consumption recording.
- enables the monitoring or indication of switch status and, with suitable authorization, remote switching.
- shows selected measurements online and messages from the 7KM PAC3200 and PAC4200 measuring devices
- collects archived data, which can be exported to Excel and presented in various reports.

Benefits

- Increased energy efficiency due to exact knowledge of the load profile
- Optimization of power supply contracts
- Assignment of power costs to cost centers
- Optimization of plant maintenance
- Identification of critical plant conditions
- Reliable monitoring of the power limit through automatic load management

Application

The SIMATIC-based power management system is used wherever power flows need to be transparently displayed and monitored, and also where it is necessary to effectively intervene above the process control level.

Industries

SIMATIC powerrate is used in all areas where PCS 7 or WinCC is used and where energy efficiency considerations play a major role.

More information

Hardware components

- the 7KM PAC measuring devices in this chapter or in Catalog LV 10.1 · 2012, chapter 11
- the 3WL air circuit breakers in Catalog LV 10.1 · 2012, chapter 1
- the 3VL molded case circuit breakers in Catalog LV 10.1 · 2012, chapter 2

Software components

- SIMATIC powerrate
- PCS 7 function block library PAC3200
- WinCC function block library PAC3200

All software components can be found in Catalog LV 10.1 · 2012, chapter 13.

You can find more information on the Internet at:
www.siemens.com/lowvoltage/energymanagement

Overview

Devices	Page	Application	Standards	Used in: Non-residential buildings	Residential buildings	Industry
7KM PAC measuring devices						
 **7KM PAC3100 measuring device** AC/DC power supply unit with screw connection	11/8	Control panel flush-mounting instrument with graphics display, integrated digital in- and outputs and a RS 485-interface for the transfer of measured values and configurations. Display of 30 electrical measured values and consumption values in switchgear assemblies, infeed or outgoing units. International standards and multi-lingual displays for worldwide use.	IEC 61557-12	✓	--	✓
 **7KM PAC3200 measuring device** 3 versions: • AC/DC power supply unit with screw connection • DC power supply unit with extra-low voltage, screw connection • AC/DC power supply unit with ring terminal lug connection	11/8	Control panel flush-mounting instrument with graphics display, integrated digital in- and outputs and an integrated Ethernet interface for the transfer of measured values and configurations. Display of over 50 electrical measured values for switchgear assemblies, infeed or outgoing feeders. Dual-tariff power measuring devices for precise energy monitoring for power draw and feedback. The following expansion modules are available: • 7KM PAC Switched Ethernet PROFINET • 7KM PAC Modbus RTU via RS485 • 7KM PAC PROFIBUS DP	Energy-measurement accuracy according to IEC 62053	✓	--	✓
 **7KM PAC4200 measuring device** 3 versions: • AC/DC power supply unit with screw connection • DC power supply unit with extra-low voltage, screw connection • AC/DC power supply unit with ring terminal lug connection	11/8	Control panel flush-mounting instrument with graphics display, user-defined displays, memory, clock and calendar function, digital in- and outputs and an integrated Ethernet interface with gateway function to transfer measured values and configurations. Display of over 200 electrical measured values for switchgear assemblies, infeed or outgoing feeders. Extensive functions for precise energy-monitoring for power draw and feedback and for appraisal of network quality. The following expansion modules are available: • 7KM PAC Switched Ethernet PROFINET • 7KM PAC Modbus RTU via RS 485 • 7KM PAC PROFIBUS DP • 7KM PAC 4DI/2DO	IEC 61557-12	✓	--	✓
 **Expansion modules for 7KM PAC measuring devices**	11/27	• The 7KM PAC Switched Ethernet PROFINET expansion module is used to connect the 7KM PAC3200 and PAC4200 power monitoring devices to the Switched Ethernet PROFINET (PROFIenergy). • The 7KM PAC PROFIBUS DP expansion module is used to connect the 7KM PAC3200 and PAC4200 to PROFIBUS DPV1. • The 7KM PAC RS485 expansion module is used to connect simple devices with RS 485 interface, e. g. the 7KM PAC3100 and supports the Modbus RTU protocol. • The 7KM PAC 4DI/2DO expansion module is used to expand the 7KM PAC4200 measuring device to up to 10 digital inputs and 6 digital outputs.	IEC 62053-31	✓	--	✓

Introduction

Devices		Page	Application	Standards	Used in		
					Non-residential buildings	Residential buildings	Industry
7KT PAC measuring devices							
	**7KT PAC1500 three-phase measuring device** 7KT1 5	11/32	Measurement of consumption data and plant capacity utilization in three-phase systems of system components, offices or holiday apartments.	EN 50470-1, EN 50470-3 EN 62052-23, EN 62053-31	✓	✓	✓
	**7KT PAC1500 single-phase measuring device** 7KT1 53	11/35	For the measurement of kWh in single-phase systems, e. g. in industrial plants, offices and apartments in apartment houses	EN 50740-1, EN 50470-3, EN 62053-31	✓	✓	✓
	**Expansion modules for 7KT PAC1500 measuring devices**	11/38	Communication interfaces with IrDA infrared interface for 7KT PAC1500 measuring devices. Modules are available for the following bus systems: • M-Bus • Modbus RTU • RS -485 • KNX/EIB	EN 13757 ISO/IEC 14543-3 EN 50090, EN 13321-1	✓	✓	✓
	**7KT PAC3000 measuring devices** 7KT1 31, 7KT1 34	11/39	Display of 38 electrical measured values and consumption values in switchgear assemblies, infeed or outgoing units. Easy commissioning due to fault detection if connected incorrectly.	IEC 60051-2, EN 60051-2 IEC 61010-1, EN 61010-1 (VDE 0411 T 1) IEC 62053-21, EN 62053-21 (VDE 0418 T 3-21)	✓	--	✓

Devices		Page	Application	Standards	Used in		
					Non-residential buildings	Residential buildings	Industry
Other measuring devices							
	**Digital measuring devices** 7KT1 11, 7KT1 12	11/42	Voltage and current measurement with large 3-digit LEDs for monitoring incoming and outgoing currents as well as device currents in order to prevent plant overload.	DIN 43751-1, DIN 43751-2	✓	--	✓
	**Time and pulse counters for standard rail mounting** 7KT5 8	11/44	For monitoring operating hours and starting operations for planning preventative maintenance tasks and preventing sudden shutdowns	IEC 60255-6, EN 60255-6, (VDE 0435-301), UL 94	✓	✓	✓
	**Time counters for front-panel mounting** 7KT5 5, 7KT5 6	11/46	For monitoring operating hours and starting operations for planning preventative maintenance tasks and preventing sudden shutdowns.	IEC 60255-6, EN 60255-6 (VDE 0435-301)	✓	✓	✓
LAN couplers							
	**7KT1 391 LAN couplers**	11/47	Webserver with 2 GB of internal memory, for up to 30 7KT15.., 7KT13.. measuring devices Global access and Excel export of up-to-date consumption data via LAN or Internet with Web browsers, such as Firefox	IEEE 802	✓	--	✓
Accessories							
	**7KT1 2 current transformers**	11/49	Straight-through transformers for installation in distribution boards and non-contact measuring of primary currents. Ideal for combining with switch disconnectors, measuring devices, and counters.	IEC 60044-1, EN 60044-1 (VDE 0414 T 44-1)	✓	--	✓
	**7KT9 0 measuring selector switches**	11/50	For switching over the phases for voltmeters and ammeters		✓	--	✓

Overview

Precise measuring with 7KM PAC3100, PAC3200 and PAC4200

The 7KM PAC measuring devices:
PAC3200 (left), PAC3100 (center) and PAC4200 (right)

The 7KM PAC measuring devices are used to measure and indicate all relevant network parameters in low-voltage power distribution. They can be used for single-phase measurements as well as for multiphase measurements in 3 and 4-conductor networks (TN, TT, IT).

Energy values for main distribution boards, electrical feeders or individual loads are recorded precisely and reliably, and important measured values are supplied in addition for assessing the state of the plant and the quality of the network.

Features

7KM PAC measuring devices, general

The measuring devices of the 7KM PAC series offer the following key features:

- Simple mounting and commissioning
- High IP65 degree of protection (front side, when installed) permits usage in extremely dusty and wet environments
- Intuitive operation using 4 function buttons and multi-lingual plain text displays
- Easy adaptation to different systems using integrated and optional
  - digital inputs and outputs
  - communication interfaces
- Worldwide use
  - min. 8 languages
  - international approvals
  - developed and tested to European and international standards
- Low mounting depth

7KM PAC3200 and 7KM PAC4200 measuring devices

Additional performance characteristics of the 7KM PAC3200 and
7KM PAC4200:

- Precise energy recording
- Versatile system integration
  - integrated Ethernet interface
  - optional communication modules available
  - multifunctional digital inputs and outputs
  - limit value monitoring
- Can be connected directly to power supply networks up to 690V AC (UL-L) , CATIII without voltage transformers.
- Easy-to-use configuration software included in the scope of delivery

7KM PAC4200 measuring device

The 7KM PAC4200 also offers the following additional features:

- Monitoring the plant status and the system quality
  - basic information for evaluating network quality
  - logging of plant operations through operational, operating and system events
- Recording of the power range through power averaging (load profile)
- Daily energy meters for apparent, active and reactive energy across 365 days for cut-off date assessment
- Detection of gas, water, compressed air or other energy sources via pulse counter to the digital inputs
- Can be expanded using modules to up to 10 digital inputs and 6 digital outputs
- Meters for apparent, active and reactive energy for the precise detection of the power consumption of a partial process or manufacturing process
- 10/100 Mbit/s Ethernet interface with gateway function for easy connection of devices with serial RS 485 interface via expansion module 7KM PAC RS485 to an Ethernet network
- Comprehensive convenience indicators, such as user-defined displays, bar and status indicators, phase diagram and list and histogram graphics
- Satisfies the accuracy requirements of class 0.2S high-precision meters used by power supply companies according to IEC 62053-22, which are normally reserved for exacting industrial applications

Technical specifications



Instrument variants		7KM PAC3100	7KM PAC3200	7KM PAC4200
Basic measurement variables				
Voltage, current		✓	✓	✓
Neutral conductor current		✓	--	✓
Apparent power, active power, reactive power, power factor		✓	✓	✓
Power factor of the fundamental wave		--	--	✓
Frequency	Of the reference phase	✓	✓	✓
Min/max values	Slave pointer function | With date & time	✓ | --	✓ | --	✓ | ✓
Power measurement				
Apparent energy		--	✓	✓
Active energy, reactive energy	Input | Output | Balance	✓ | ✓ | ✓	✓ | ✓ | --	✓ | ✓ | --
Number of tariffs	Apparent, active and reactive energy	1	2	2
Daily energy values for 365 days	Apparent, active and reactive energy	--	--	✓
Consumption recording of a sub-process or manufacturing process	Apparent, active and reactive energy	--	--	✓
Power averages of the last integration period	Active and reactive power average with min / max value	✓	✓	✓
Load profile record		--	--	✓ max. 3840 entries[1]
Power measuring devices for S_0 signal at a digital input	Electrical energy | Any energy	-- | --	✓ | --	✓ | ✓
Accuracy class for active energy	According to IEC 62053-21 / 62053-22	Class 1	Class 0.5S	Class 0.2S
Accuracy class for reactive energy	According to IEC 62053-23	Class 3	Class 2	Class 2
Monitoring of state of the plant and quality of the network				
Configurable displays	For presenting up to 4 measured quantities	--	--	4
Operating hours meter	Operating hours of loads	--	✓	✓
Sliding mean values	*U, I, S, P, Q, LF*	--	--	✓
THD voltage, current		--	THD-R	THD
Distortion current strength		--	--	✓
Phase angle, phase displacement angle		--	--	✓
Unbalance	Voltage | current	--	U_{nba} | I_{nba}[2]	U_{nb} | I_{nb}[3]
Harmonics in voltage, current		--	--	3. to 31st
Limit value monitoring	Max. number of limit values	--	6	12
Boolean logic	For limit values | inputs	--| --	✓ | --	✓ | ✓
Event memory for operation, control and system-related events	Including time stamp	--	--	✓ (> 4000 events)
Battery backup for min / max values		--	--	✓
System integration and communication				
Ethernet (integrated)		--	10 Mbit/s	10/100 Mbit/s
• Protocol	Modbus TCP	--	✓	✓
• Gateway	Ethernet <--> RS 485 (Modbus)	--	--	✓[4]
PROFINET incl. PROFIenergy		--	Expansion module optional	
PROFIBUS DPV1		--	Expansion module optional	
RS 485		Integrated	Expansion module optional	
• Protocol	Modbus RTU	✓	✓	✓
4DI/2DO expansion module	Expansion to max. 10 DI / 6 DO	--	--	✓ (max. 2 modules)
Number of expansion modules	Max.	--	1	2
Integrated digital inputs (DI)	Number | multifunctional	2 | --	1 | ✓	2 | ✓
Integrated digital outputs (DO)	Number | multifunctional	2 | ✓	1 | ✓	2 | ✓
Installation plan				
Dimensions (L x W x D)	In mm	96 x 96 x 56	96 x 96 x 56	96 x 96 x 82
Mounting depth	PAC | PAC with expansion module (in mm)	51 | --	51 | 73	77 | 99
Panel cutout (L x W)	In mm	92 x 92	92 x 92	92 x 92
Standards and approvals				
CE / cULus / C-Tick / GOST		✓	✓	✓
IEC 61557-12		✓	--	✓

1) This corresponds for example to a duration of 40 days with an integration period length of 15 minutes.

2) U_{nba}, I_{nba} - Unbalance with regard to amplitude

3) U_{nba}, I_{nba} - Unbalance with regard to amplitude and phase

4) In conjunction with 7KM PAC RS 485 expansion module

✓ = Available, -- = Not available

Application

Three-phase measuring devices are used to measure and indicate all relevant network parameters of an electrical installation and they monitor these parameters permanently.

Applications

Wherever power has to be distributed, be it in industrial or infrastructural buildings, the 7KM PAC measuring device supplies important information to the building services system or the power controlling system.

The many different communication options offered by the 7KM PAC measuring device make it an indispensable supplier of data for power management systems and for plant and building automation.

Industries

Power distribution systems for the power supply are needed in all sectors of industry. The 7KM PAC measuring devices are therefore used in all sectors where power consumption and electrical parameters are to be measured.

Integration of 7KM PAC3200 and 7KM PAC4200

Fully integrated in a power management system, the 7KM PAC3200 und 7KM PAC4200 measuring devices monitor the power consumption and help to monitor the operating state of the plant. Measured values, limit value violations, operating hours of a connected load or power flows are supplied by the instruments quickly and reliably.

Using the optionally available interface modules, it is possible to integrate both instruments in every I&C system or every SIMATIC S7 environment.

System integration using function block libraries

Optionally available function block libraries make it easy to integrate the measuring devices in the SIMATIC PCS 7 process control system and the SCADA-System SIMATIC WinCC. Together with the faceplates as user interface for 7KM PAC3200, the driver blocks and diagnostics blocks in the control system enable the operating and monitoring of technologically important values and functions of the measuring devices in the respective target system.

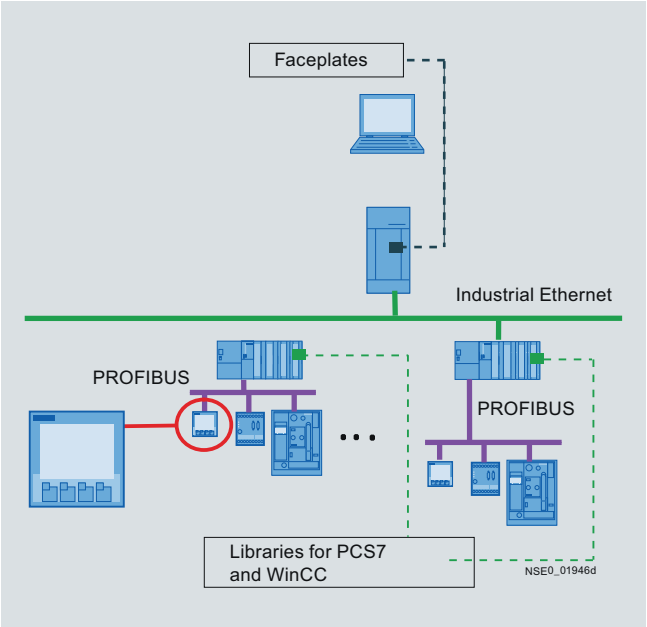

Integration of 7KM PAC3200 in SIMATIC PCS 7 / WinCC

System integration of RS 485 field bus devices via Ethernet

A special feature is the integrated gateway function of the 7KM PAC4200. It enables a cost-effective and simple connection of devices with an RS 485 interface to an Ethernet network.

Everything required is provided by the 7KM PAC RS485 expansion module, to which a maximum of 31 lower-level devices can be connected without a repeater and as many as 247 with a repeater.

The gateway function of the 7KM PAC4200 supports the Modbus protocol and can be parameterized using powerconfig.

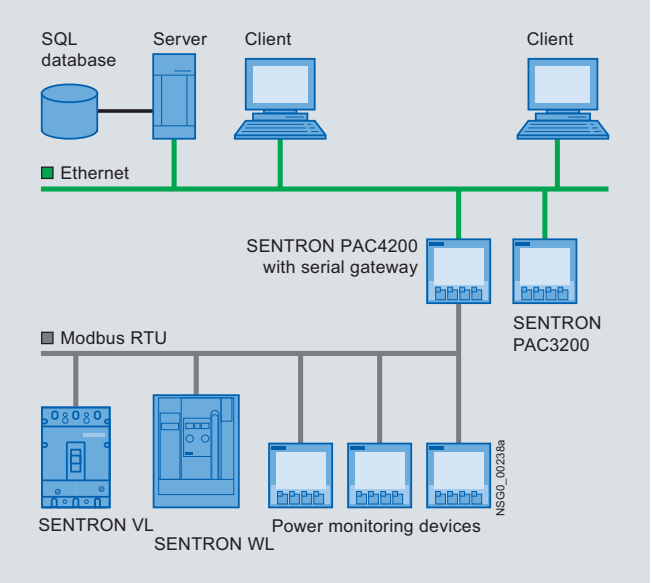

Connecting Modbus-RTU devices to a power management system through 7KM PAC4200

Design

Mounting

The 7KM PAC3200 and PAC4200 measuring devices are available with a plastic enclosure for installation in control panels. It is fastened by one holder on the right side of the device and one on the left side.

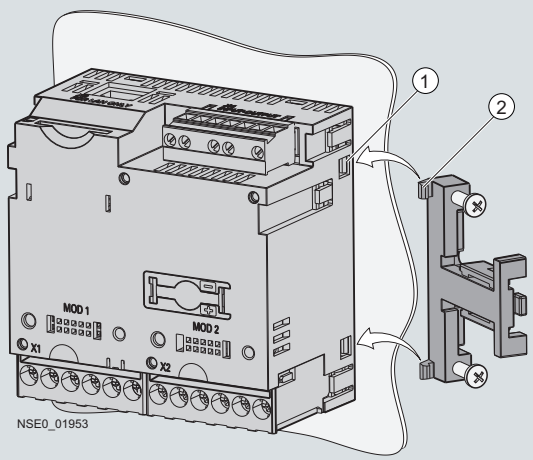

① Opening in the instrument for attaching the mounting holder

② Instrument holder with retention lugs

Integration of 7KM PAC3100, PAC3200 and 7KM PAC4200

To mount the instruments they are inserted from the front through the square cut-out in the control cabinet door and secured with the supplied combination latching holders.

The pair of combination latching holders performs two functions:

- Thanks to the latching mechanism the fitter can fasten the device in the control panel quickly and without the use of any tools.
- If greater protection is required, the four latching holder screws can be used to increase contact pressure evenly on all sides so that the control panel cut-out is completely sealed by the integrally molded gasket, which is a standard feature. It is no longer necessary to insert an accessory gasket in addition.

From the front, i. e. in the installed state, the device thus complies with Safety Class II with degree of protection IP65.

As the result of the easy-to-use combination latching holders and the small mounting depth it is easy to mount several devices side by side.

The following illustration of the rear view of the 7KM PAC3200 and top view of the expansion module (in this case the 7KM PAC PROFIBUS DP) shows by way of example how the 7KM PAC3200 and the expansion module are joined together. An expansion module is mounted on a 7KM PAC4200 in similar manner.

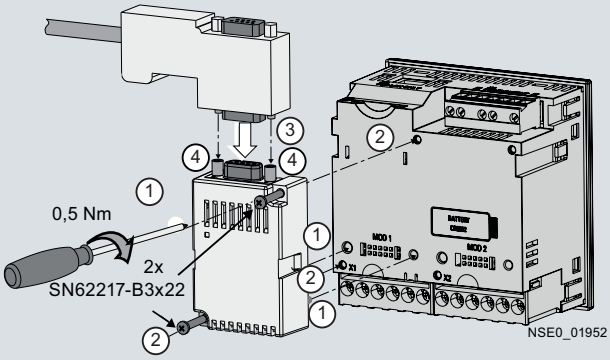

① Device and module enclosure

② Fixing screws and related holes in the enclosure

③ PROFIBUS connectors

④ Fixtures for the PROFIBUS connector

Mounting the expansion module, for example the PAC PROFIBUS DP on the 7KM PAC3200 and 7KM PAC4200

Operating and indicating elements

The following picture shows the instrument from the front, divided into the function blocks provided for operation and monitoring, including a description.

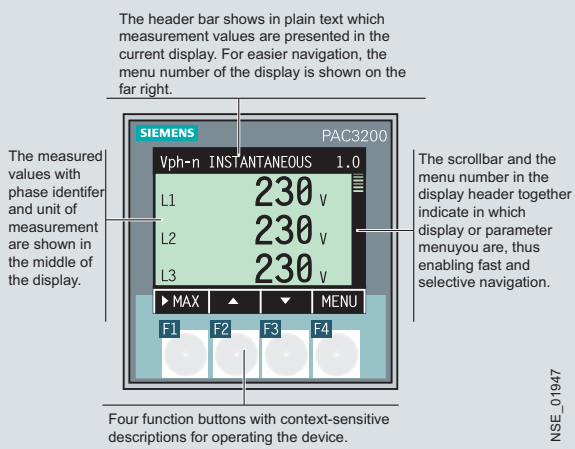

Device front of 7KM PAC 3100, PAC3200 and PAC4200 measuring devices (our example shows the 7KM PAC3200)

The instruments are operated using 4 function buttons, which correspond to the 4 text fields situated above them. The buttons are each assigned with several functions; their function at any time depends on the menu then displayed. Which function a button has in the respective menu is indicated by the text in the related display.

Function

Precise measurement of variables

7KM PAC3100 measuring device

The 7KM PAC3100 measuring device delivers a measuring accuracy Class 1 for voltages, currents, active power, apparent power, active energy (acc. to IEC 61557-12).

7KM PAC3200 measuring device

With its high accuracy, the 7KM PAC3200 measuring device meets the increasing demand for precise power measurement. It satisfies the accuracy requirements of Class 0.5S according to IEC 62053-22 for solid-state active consumption meters.

7KM PAC4200 measuring device

The 7KM PAC4200 measuring device supplies measurement data of far greater accuracy for determining and processing power data and for assessing the quality of the network:

- For voltage, current, active power and active energy the instrument achieves for example Class 0.2 according to IEC 61557-12.
- For active energy this corresponds to Class 0.2S according to the international meter standard IEC 62053-22.

The 7KM PAC4200 measuring device thus meets the accuracy requirements of the high-precision meters used by the power supply companies, which are normally reserved for exacting industrial applications.

Transparency in power matters

Altogether 10 power meters for active, reactive and apparent work monitor the power input and power feedback continuously and separated according to high rate and low rate.

In addition to the endless counters for apparent, active and reactive energy, the PAC4200 saves the power consumption levels per day for a period of 365 days. A cut-off date assessment accurate to the day is possible by entering the required calculation period. The power consumption for a preselected period can be called up either directly on the instrument or using the communication interface.

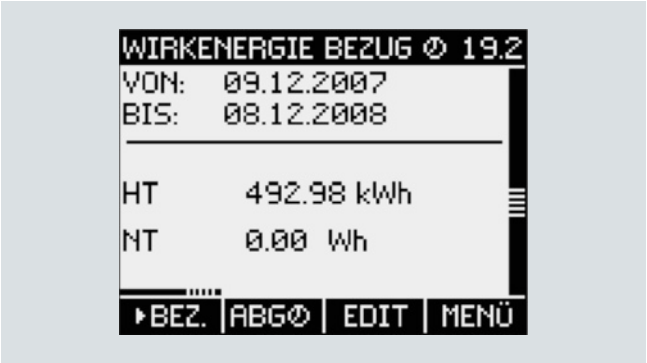

Daily counter indicator of the 7KM PAC4200

The 7KM PAC3200 and PAC4200 measuring devices supply the power averages for active and reactive power required for the load profile record and serve as reliable suppliers of data for a higher-level power management system.

Load profile record with the 7KM PAC4200

As soon as the power drawing conditions per integration period or the reactive work components begin to affect power costs it is important to have an exact picture of the load profile of one's own plant.

With its generously sized memory, the 7KM PAC4200 measuring device is ideal for this purpose. With a selected integration period of 15 minutes it records for 40 days the load profile for apparent, active and reactive power with minimum and maximum values for input and feedback. The length of the recording can be increased or decreased depending on the integration period selected.

The integration period can be synchronized with the period used by the power supply company so that the measurement data can be compared with the power supply company's records. This can be done either through one of the digital inputs or using a synchronization command over the communication interface. If there is no synchronization possibility available, the instrument synchronizes itself with its internal clock.

For the load profile record the 7KM PAC4200 supports the fixed block method (only one integration period) or the rolling block method (division of the integration period into several sub-periods). In addition it is possible to choose between arithmetic or cumulated power average calculation.

Individual adaptation of the load profile record is possible with the powerconfig configuration software.

Powerful communication

7KM PAC3100 measuring device

The 7KM PAC3100 measuring device has an integrated RS 485 connection and can be operated using the Modbus RTU protocol.

Ethernet interface (7KM PAC3200/4200 measuring devices)

The 7KM PAC3200/4200 measuring devices are equipped with an Ethernet interface as standard, which can be used not only for configuration purposes using powerconfig, but also for system communication in a higher-level power management system. So there is no need for any additional hardware.

The 10 Mbit/s Ethernet interface of the 7KM PAC3200 permits one communication connection while the 10/100 Mbit/s Ethernet interface of the 7KM PAC4200 permits three such connections simultaneously. Both instruments support the Modbus TCP protocol.

The Ethernet interface of the 7KM PAC4200 offers not only a higher data transmission rate but also additional functions:

- Auto MDI(X) (auto crossover) and auto negotiation
- Serial gateway for connecting devices with an RS485 interface to an Ethernet network

PROFIBUS DP interface (7KM PAC3200/4200 measuring devices)

Use of the power monitoring devices in PROFIBUS DP is made possible by the optionally available 7KM PAC PROFIBUS DP expansion module.

Integration in PROFIBUS DP takes place using a standardized text file called the GSD (Gate-Stammdaten-Datei). This GSD file is read into the master with the help of the PROFIBUS configuration tool. The master thus receives the slave-specific framework of the PAC3200 or PAC4200 and can start cyclic operation immediately. With DP V1 the PAC PROFIBUS DP expansion module also supports acyclic data traffic.

Modbus-RTU or SEAbus interface

Use of the power monitoring devices in Modbus-RTU or SEAbus field buses is made possible by the optionally available PAC RS485 expansion module.

Integration in Modbus RTU or SEAbus systems takes place through parameterization of the device address and baud rate using the device keyboard or powerconfig.

The 7KM PAC4200 measuring device provides comprehensive information about events

Voltage failures, limit value violations, switching operations, unit configuration changes, counter resets or deleting of the memory are just some of the possible events which the 7KM PAC4200 records and saves to the events list.

The integrated memory has space for more than 4000 operation, control and system-related events, which the user can organize according to his requirements.

For example, in addition to the three selectable alert levels for information, warning or alarm it is possible to choose the priority of each event independently of each other. And it is also possible of course to choose whether an event is to be recorded at all and in which order the events are to be shown on the display.

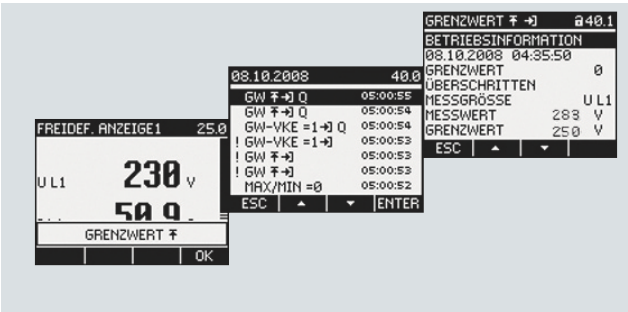

Three-level event indicators on the 7KM PAC4200

Events are presented in three levels:

- Popup window for signaling important events, e. g. in the case of alarm indications. Mandatory acknowledgment is selectable for particularly important events.
- Events list for clear-cut presentation of the individual events with symbols indicating the alert level
- Detail window with particulars of the event, e. g. event class, date and time of occurrence, reason for triggering the event and, where applicable, the measurement variable in question with its measured value and limit value

The events record can be configured with the powerconfig configuration software.

Plain-text displays

A large, full graphic LCD display enables easy reading even from great distances. To make sure that this is also the case in poor light conditions, the background lighting can be individually adapted to the actual requirements.

In addition to the standard indicators of the PAC3100/PAC3200, the PAC4200 offers up to four user-definable indicators. These indicators can be used for individual arrangement of the desired measurement variables and for their presentation as bar or digital indicators.

Operation, also multilingual

Operation is quick to learn thanks to the intuitive user guidance using the four function buttons together with multilingual plain text displays. Direct navigation is available in addition for the experienced user, who can thus call up the menus of choice even more quickly.

Following languages can be selected: German, English, Portuguese, Turkish, Spanish, Italian, French, Chinese and Russian.

The product documentation is also available in 9 languages.

Multifunctional digital inputs and outputs

The 7KM PAC3200 measuring device is equipped with one and the 7KM PAC3100 and PAC4200 with two multifunctional digital inputs and outputs, to each of which various functions can be assigned.

Functions of the digital inputs:

Measuring device: 7KM ...	PAC3100	PAC3200	PAC4200
Number of integrated digital inputs	2	1	2
Counting input for work pulses (kWh, kvarh) from third-party devices	--	✓	✓ + any energy form
Status monitoring of a switching device	✓	✓	✓
Rate switchover between high rate and low rate	--	✓	✓
Signal input for synchronization of the integration period	--	✓	✓
Time synchronization of the internal clock with a master clock	--	--	✓

Functions of the digital outputs:

Measuring device: 7KM ...	PAC3100	PAC3200	PAC4200
Number of integrated digital outputs	2	1	2
Pulse output for sending work pulses (kWh, kvarh)	✓	✓	✓
Alarm output for signaling limit value violations	--	✓	✓
Operating state indicator	--	✓	✓
Phase sequence indicator	--	✓	✓
Switching output for remote control using system software	✓	✓	✓
Synchronization of third-party devices with one's own integration period	--	--	✓

✓ Available

-- Not available

Monitoring of measured quantities for limit value violation (only 7KM PAC3200 and 7KM PAC4200)

The 7KM PAC3200 has a function for monitoring up to 6 and the 7KM PAC4200 up to 12 measurement variables for violation of an adjustable upper or lower limit value.

The following variables can be monitored: voltage, current, power, power factor, THD for voltage and current, frequency, unbalance of voltage and current.

In addition it is possible with the 7KM PAC4200 to monitor the phase angle, distortion current strength, individual network harmonics from the 3rd to the 31st harmonic, and sliding mean values.

The following can be assigned to each limit value:

- A measurement variable
- The monitoring mode (overshooting or undershooting)
- A limit value
- A delay time and
- A hysteresis

It is possible to select the action which will be triggered by violation of a limit value.

For example, a signal can be sent through the digital output or the communication interface. The integrated universal counter can be used to total the number of limit value violations. Whether a limit value has been violated is indicated on the device.

Technical data and configuration aids

Interconnected with logic operations...

The 7KM PAC3200 und PAC4200 measuring devices have a function for interconnecting limit values using logic operations as follows:

- 7KM PAC3200: AND/OR
- 7KM PAC4200: AND/OR/NAND/NOR/XOR/XNOR

Like the individual limit values, the result of the logic operation can also trigger selective actions, which were previously described in the section "Monitoring of measurement variables for limit value violations".

...and conveniently programmed with the 7KM PAC4200

In addition to the interconnection of limit values it is also possible with the 7KM PAC4200 to include the digital inputs in the logic operation.

On the 7KM PAC4200 the logic operations are configured in user-friendly manner using a graphic programming interface. To each of the 5 logic gates it is possible to assign 4 random inputs (limit value or digital input) and one logic function (AND, OR, NAND, …).

From the small black bar at the inputs of the gates the user can see the state of the input at a glance.

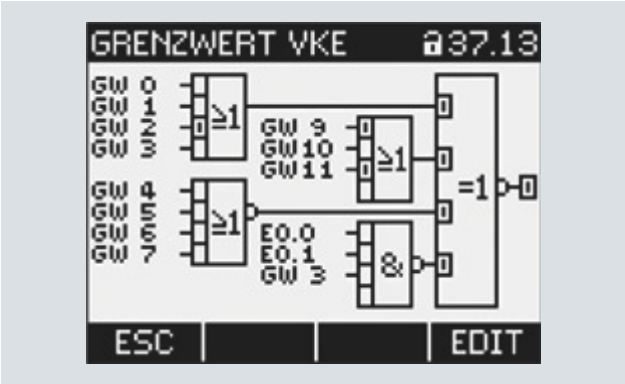

Logic operations with limit value events on the 7KM PAC4200 measuring device

Monitoring of voltage and current for unbalance (only 7KM PAC4200)

The 7KM PAC4200 measuring device measures the unbalance of voltage and current in the network (among other things). Now that a limit value can also be assigned to these two parameters, problems due to unsymmetrical loads in the installation can be detected early and avoided.

Operating hours meter (7KM PAC3200 and PAC4200 measuring devices)

An important service function is performed by the integrated operating hours meter, which can be used to monitor e. g. pumps, motors or machines. The counter measures the running time of a connected load, helping to ensure that important maintenance intervals are observed.

The count can be read out and evaluated by a PC. A higher-level power management system is thus able to generate a suitable maintenance message.

Universal

The 7KM PAC3100, PAC3200 and PAC4200 measuring devices can all be used for measuring in two, three and four-conductor networks. Single-phase, 2-phase and 3-phase measurements are possible.

Thanks to their large measuring voltage range, the instruments can be directly connected in every low-voltage system up to a rated system voltage of 690 V (U_{L-L})[1]. Higher voltages can be measured using voltage transformers.

For measuring currents it is possible to use both x/1A and x/5A current transformers (in the case of 7KM PAC3100 - only x/5A x/5A current transformer). Transformer ratios and current direction can be programmed on the device for adaptation to local conditions.

Protection against unauthorized access

The 7KMPAC3100, PAC3200 und PAC4200 measuring devices come with integrated password protection so that the power and parameter data are safe from unauthorized access. Changes to the parameterization can be traced using a configuration counter which can be read out through the communication interface.

[1] Max. 500 V (UL-L) for version with DC power supply unit with extra-low voltage (7KM2111-1BA00-3AA0)

Technical specifications

Device			7KM PAC3100	7KM PAC3200	7KM PAC4200
Measurement					
Networks					
Voltage types			Only for alternating voltage systems	Only for alternating voltage systems	Only for alternating voltage systems
Number of phases			1, 2 or 3-phase	1, 2 or 3-phase	1, 2 or 3-phase
Number of conductors			3 or 4 conductors	3 or 4 conductors	3 or 4 conductors
Load type			Same or any load	Same or any load	Same or any load
Quadrants			4 quadrants (input and output)	4 quadrants (input and output)	4 quadrants (input and output)
Frequency of fundamental wave		Hz	50/60	50/60	50/60
Signal detection	For power, current and voltage		Seamless	Seamless	Seamless
Curve shape			Sinusoidal or distorted	Sinusoidal or distorted	Sinusoidal or distorted
Measuring inputs for voltage					
Rated voltage 3 AC U_e (max.)					
Device with AC/DC power supply unit with wide voltage range			7KM3 133-0BA00-3AA0	7KM2 112-0BA00-3AA0 or 7KM2 112-0BA00-2AA0	7KM4 212-0BA00-3AA0 or 7KM4 212-0BA00-2AA0
	Phase/N	V AC	277 (max. 347 for UL) +20 %	400 (max. 347 for UL) +20 %	400 (max. 347 for UL) +20 %
	Phase/phase	V AC	480 (max. 600 for UL) +20 %	690 (max. 600 for UL) +20 %	690 (max. 600 for UL) +20 %
Device with DC power supply unit with extra-low voltage			--	7KM2111-1BA00-3AA0	7KM4 211-1BA00-3AA0
	Phase/N	V AC	--	289 +20 %	289 +20 %
	Phase/phase	V AC	--	500 +20 %	500 +20 %
Minimum measurable voltage	Phase/N	V AC	11.6	40	11.5
	Phase/phase	V AC	20	69.3	20
Surge strength					
	1.2/50 µs	kV	6.5	9.5	9.5
Input resistance					
	Phase/N	MΩ	0.84	1.05	1.05
Power inputs					
	Per phase	mW	131	220	220
Measuring category			CAT III	CAT III	CAT III
Measuring of voltages > 690 or 500 V AC using voltage transformer					
Measuring inputs for current					
Rated current 3 AC I_e per phase	adjustable	A AC	1 or 5	1 or 5	1 or 5
Permanent load capacity	Permanent	A AC	10	10	10
Surge overload capability	For 1 second	A AC	100	100	100
Power inputs	Per phase	mVA	500 at 6 A	4 at 1 A, 115 at 5 A	4 at 1 A, 115 at 5 A
Measuring category			CAT III	CAT III	CAT III
Zero point suppression	adjustable		10 mA in the phases 45 mA in the neutral conductor	0 ... 10 %	0 ... 10 %
Measuring of currents using current transformer			x / 5 A	x /1 A or x / 5 A	x /1 A or x / 5 A
Control supply voltage					
AC/DC power supply unit with wide voltage range			7KM3 133-0BA00-3AA0	7KM2112-0BA00-3AA0 or 7KM2112-0BA00-2AA0	7KM4212-0BA00-3AA0 or 7KM4212-0BA00-2AA0
Primary operating range		V AC	100 … 240 ±10%	95 … 240 ±10%	95 … 240 ±10%
		V DC	110 … 250 ±10%	110 … 340 ±10%	110 … 340 ±10%
Rated frequency of the AC operating range		Hz	50/60	50/60	50/60
DC power supply unit with extra-low voltage			--	7KM2111-1BA00-3AA0	7KM4 211-1BA00-3AA0
Primary operating range		V DC	--	22 … 65 ±10%	22 … 65 ±10%
Power consumption (max.)					
Without optional expansion module		AC VA	10	6	11
		DC W	5	3	5.5
Including optional expansion module		AC VA	--	8	32
		DC W	--	3.5	11
Overvoltage category			CAT III	CAT III	CAT III

Technical data and configuration aids

Device			7KM PAC3100	7KM PAC3200	7KM PAC4200
Fault limits					
Accuracy class acc. to IEC 61557-12:2007			Yes	No	Yes
The accuracy class acc. to IEC 61557-12 is the value in % specific to the measured value under reference conditions.				--	
Voltage	Phase/N		1	±0.3 %	0.2
	Phase/phase		1	±0.3 %	0.2
Current			1	±0.2 %	0.2
Apparent power			1	±0.5 %	0.5
Active power			1	±0.5 %	0.2
Reactive power			3	±2 %	1.0
Frequency			0.1	±0.05 %	0.1
p.f.			--	--	0.2 % [1]
Power factor (p.f.)			2	±0.5 %	2.0
Phase angle			--	--	±1° [1]
Apparent energy			--	±0.5 %	0.5
Active energy			1	Class 0.5S acc. to IEC 62053-22	0.2
Reactive energy			3	Class 2 acc. to IEC 62053-23	2
When taking measurements on external current or voltage transformers, the accuracy of the measurements depends on the quality of the transformers.					
Digital inputs					
Number			2	1	2
Rated value		V DC	24	24	24
Max. input voltage		V DC	30 (SELV or PELV supply)	30 (SELV or PELV supply)	30 (SELV or PELV supply)
Input threshold	Signal "1"	V DC	> 13	> 13	>19
	Signal "0"	V DC	< 8	< 8	< 10
Input current	Signal "1"	mA DC	2.5 ... 10	7	4
Max. input delay time	From "0" to "1"	ms	5	5	5
	From "1" to "0"	ms	5	5	5
Digital outputs					
Number			2	1	2
Function			Switching or pulse output	Switching or pulse output	Switching or pulse output
Required operational voltage		V DC	12 ... 24	12 ... 24	12 ... 24
Max. switched output voltage		V DC	30 (SELV or PELV supply)	30 (SELV or PELV supply)	30 (SELV or PELV supply)
Output current signal "1"					
Typical		mA DC	10 ... 27	10 ... 27	10 ... 27
Permanent	Max.	mA DC	50 (thermal overload protection)	100	100 (thermal overload protection)
Short-time overload for max. 100 ms		mA DC	130	300	300
Resistive load		mA DC	100	100	100
Switching frequency	Max.	Hz	17	17	17
Max. output delay time	From "0" to "1"	ms	5	5	5
	From "1" to "0"	ms	5	5	5
Pulse output function			Signal characteristic acc. to IEC 62053-31	Signal characteristic acc. to IEC 62053-31	Signal characteristic acc. to IEC 62053-31
Adjustable pulse duration		ms	30…500	30…500	30…500
Minimum adjustable time frame		ms	10	10	10
Short-circuit protection			Yes	Yes	Yes

[1] The standard IEC 61557-12 does not specify an accuracy class for these sizes. The data refer to the max. deviation from the actual value.

Device		7KM PAC3100	7KM PAC3200	7KM PAC4200
Communication				
Ethernet		--		
Version		--	RJ45 (8P8C)	RJ45 (8P8C)
Usable cable types (ground necessary)		--	Twisted pair (CAT 5)	Twisted pair (CAT 5)
Protocol		--	Modbus TCP	Modbus TCP
Transmission rate max.	MBit/s	--	10	10/100
Supported functions		--	--	Auto negotiation and Auto MDI(X)
Ethernet ports		--	1	2
Max. number of simultaneous connections		--	1	3
Max. update time at the interface for instantaneous values	ms	--	200	200
Serial gateway				
Protocol (Ethernet)		--	--	Modbus TCP
Protocol (lower-level devices)		--	--	Modbus RTU or SEAbus
Use requirement		--	--	7KM PAC RS485 expansion module
Max. number of lower-level devices		--	--	Without repeater: 31 With repeater: 247
PROFIBUS DP				
via 7KM PAC PROFIBUS DP V1 expansion module		--	Yes	Yes
Transmission rate max.	MBit/s	--	12	12
Variables to be transmitted		--	Definable using GSD file	Definable using GSD file
RS485				
Using expansion module 7KM PAC RS485		No, integrated	Yes	Yes
Transmission rates	kBd	Optionally 4.8 /9.6 /19.2 / 38.4	Optionally 4.8 /9.6 /19.2 / 38.4	Optionally 4.8 /9.6 /19.2 / 38.4
Protocol		Modbus RTU	SEAbus or Modbus RTU switchable	SEAbus or Modbus RTU switchable
Displays and controls				
Display type		LCD, monochrome	LCD, monochrome	LCD, monochrome
Types of indication		Alphanumeric and text	Alphanumeric and text	Full graphic
Resolution	Dots	128 x 96	128 x 96	128 x 96
Size	mm	72 x 54	72 x 54	72 x 54
Contrast		Adjustable	Adjustable	Adjustable
Presenting		Display invertible, pos/neg mode	Display invertible, pos/neg mode	Display invertible, pos/neg mode
Background lighting				
Background color		White	White	White
Lighting intensity		Adjustable	Adjustable	Adjustable
Lighting intensity reduced		Adjustable	Adjustable	Adjustable
Time until reduction of lighting intensity	min	0 ... 99	0 ... 99	0 ... 99
Update time	s	0.33 … 3, adjustable		
Keyboard		4 function keys F1 to F4 on the front		

Technical data and configuration aids

Device			7KM PAC3100	7KM PAC3200	7KM PAC4200
Connection elements and terminals					
Measuring inputs and supply voltage			**Screw terminals**		
Conductor cross-sections	Solid	mm²	1 x 0.5 ... 4	1 x 0.5 ... 4	1 x 0.5 ... 4
			AWG 1 x 20 … 12	AWG 1 x 20 … 12	AWG 1 x 20 … 12
		mm²	2 x 0.5 ... 2.5	2 x 0.5 ... 2.5	2 x 0.5 ... 2.5
			AWG 2 x 20 … 14	AWG 2 x 20 … 14	AWG 2 x 20 … 14
	Finely stranded with end sleeve	mm²	1 x 0.5 ... 2.5	1 x 0.5 ... 2.5	1 x 0.5 ... 2.5
			AWG 1 x 20 … 14	AWG 1 x 20 … 12	AWG 1 x 20 … 12
		mm²	2 x 0.5 ... 1.5	2 x 0.5 ... 1.5	2 x 0.5 ... 1.5
			AWG 2 x 20 … 16	AWG 2 x 20 … 16	AWG 2 x 20 … 16
Tool size	± screw, Pozidriv		2	2	2
Measuring inputs and supply voltage			**Ring terminal lug connections**		
Conductor cross-sections	Dependent on ring terminal lug used	mm²	--	1 x 1.0...6.0	1 x 1.0...6.0
			--	AWG 1 x 18...10	AWG 1 x 18...10
		mm	--	D: 3...4	D: 3...4
				S: 0.75 ... 1.0	S: 0.75 ... 1.0
				W: ≤ 8	W: ≤ 8
				L1: ≤ 24	L1: ≤ 24
				L2: ≤ 20	L2: ≤ 20
				L3: ≥ 8	L3: ≥ 8
		inch	--	D: 0.118 ... 0.157	D: 0.118 ... 0.157
				S: 0.029 ... 0.039	S: 0.029 ... 0.039
				W: ≤ 0.314	W: ≤ 0.314
				L1: ≤ 0.944	L1: ≤ 0.944
				L2: ≤ 0.787	L2: ≤ 0.787
				L3: ≥ 0.314	L3: ≥ 0.314
Tool size	± screw, Pozidriv		--	2	2
Required tool			--	Crimping or fitting tool for ring terminal lugs	
Digital output, digital input			**Screw terminals**		
Conductor cross-sections	Solid	mm²	1 x 0.2 … 2.5	1 x 0.2 … 2.5	1 x 0.2 … 2.5
		mm²	2 x 0.2 … 1.0	2 x 0.2 … 1.0	2 x 0.2 … 1.0
			AWG 1 x 24 … 12	AWG 1 x 24 … 12	AWG 1 x 24 … 12
	Finely stranded with end sleeve	mm²	1 x 0.25 … 2.5	1 x 0.25 … 2.5	1 x 0.25 … 2.5
		mm²	2 x 0.25 … 1.0	2 x 0.25 … 1.0	2 x 0.25 … 1.0
			AWG 1 x 24 … 12	AWG 1 x 24 … 12	AWG 1 x 24 … 12
Tool size	± screw, Pozidriv		1	1	1
RS 485 terminals			**Screw terminals**	**(RS 485 connection via expansion module 7KM PAC RS485)**	
Terminal designations			Com, +/B, -/A	--	--
Conductor cross-sections	Solid	mm²	1 x 0.2 … 2.5	--	--
		mm²	2 x 0.2 … 1.0	--	--
			AWG 1 x 24 … 12	--	--
	Finely stranded with end sleeve	mm²	1 x 0.25 … 2.5	--	--
		mm²	2 x 0.25 … 1.0	--	--
			AWG 1 x 24 … 12	--	--
Tool size	± screw, Pozidriv		1		

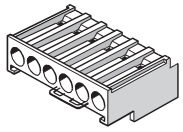

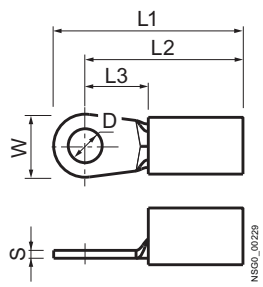

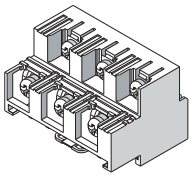

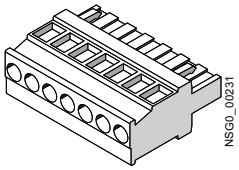

Device			7KM PAC3100	7KM PAC3200	7KM PAC4200
Dimensions and weights					
Enclosure dimensions (W x H x D)					
Without expansion module		mm	96 x 96 x 56	96 x 96 x 56	96 x 96 x 82
With expansion module		mm	--	96 x 96 x 78	96 x 96 x 104
Mounting depth					
Without expansion module		mm	51	51	77
With expansion module		mm	--	73	99
Weight					
Without expansion module	Approx.	g	325	325	450
With expansion module	Approx.	g	--	370	540
Switchboard cutout		mm	$92^{+0.8}$ x $92^{+0.8}$	$92^{+0.8}$ x $92^{+0.8}$	$92^{+0.8}$ x $92^{+0.8}$
Enclosure for installing in control panel			acc. to IEC 61554	acc. to IEC 61554	acc. to IEC 61554
Control panel thickness		mm	0.5 … 4	0.5 … 4	0.5 … 4
Mounting position			Vertical	Vertical	Vertical
Degree of protection and safety class					
Safety class according to EN 61010-1					
From the front when installed			II	II	II
Degree of protection to EN 60529					
All instruments	On front		IP65	IP65	IP65
Instrument with screw terminals	Rear		IP20	IP20	IP20
Instrument with cable lug terminals	Rear		--	IP10	IP10
Ambient conditions					
Temperature range					
Operating temperature		°C	-10 … + 55	-10 … + 55	-10 … + 55
Storage and transport temperature		°C	-25 … + 70	-25 … + 70	-25 … + 70
Relative humidity At 25 °C without condensation		%	95	95	95
Operating altitude					
Above sea level up to max.		m	2000	2000	2000
Degree of pollution			2	2	2
Battery for measurement variables buffer					
Recommended battery types	Non-rechargeable types		--	--	BR2032 or CR2032
Approval			--	--	According to UL1642
Nominal voltage / nominal discharge current		V/mA	--	--	3 / 0.2
Minimum permissible reverse current		mA	--	--	5
Suitable for ambient temperatures up to at least		°C	--	--	70
Access privileges					
Password protection			4-digit numeric code	4-digit numeric code	4-digit numeric code
Password protection prevents the following: • Changing of the instrument settings, including the password • Changing and deleting of values • Deleting of data and memory content • Setting and resetting of counts			Effective through: • Direct input on the instrument	Effective through: • Direct input on the instrument	Effective through: • Direct input on the instrument • Through the Ethernet interface • via 7KM PAC RS485 expansion module
Reading out of measured values and memory content			Possible without restriction	Possible without restriction	Possible without restriction
Standards and approvals					
CE	EU		According to the CE conformity declaration	According to the CE conformity declaration	According to the CE conformity declaration
cULus	USA / Canada		According to UL File E314880	According to UL File E314880	According to UL File E314880
UL50			Type enclosure 5	Type enclosure 5	Type enclosure 5
FCC			Class A, Part 15 Subpart B	Class A, Part 15 Subpart B	Class A, Part 15 Subpart B
Environmental tests			IEC 60068	IEC 60068	IEC 60068

Dimensional drawings

7KM PAC3100 dimensions

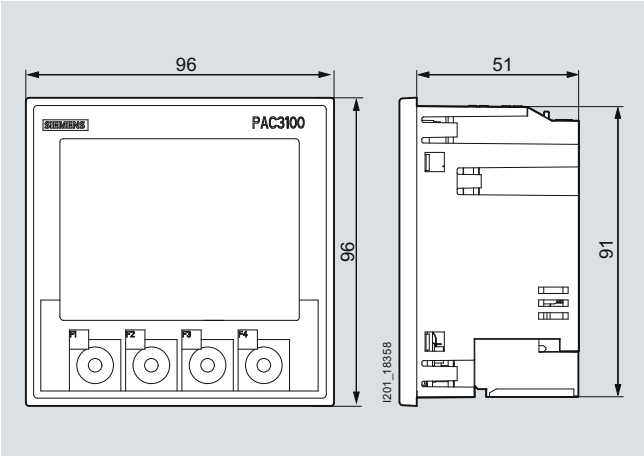

Left: Front view with screw terminals;
right: Side view with screw terminals;

7KM PAC3200 dimensions

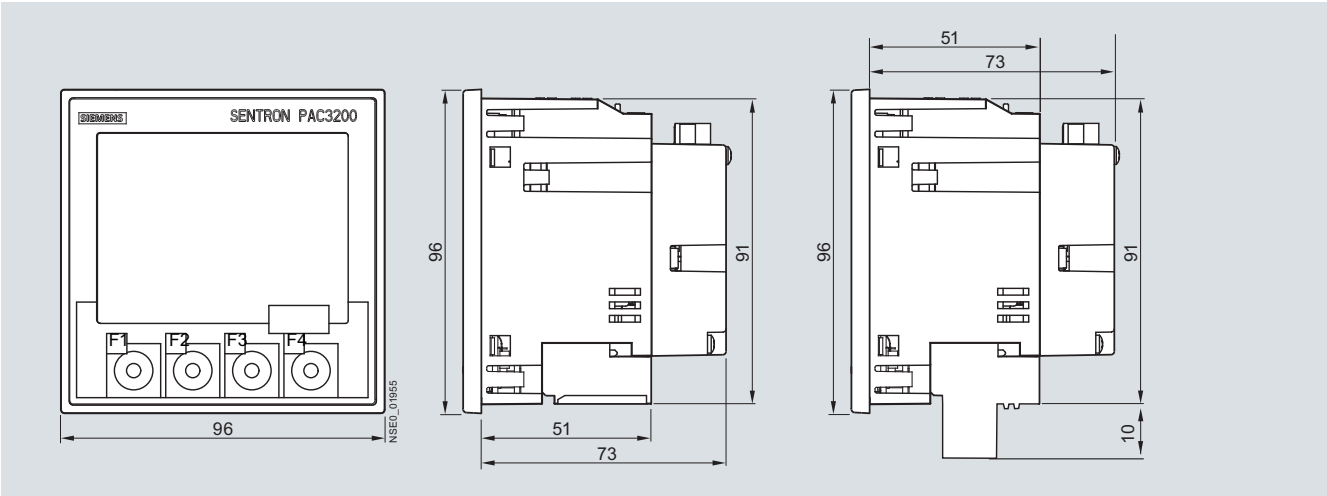

Left: Front view with screw terminals; middle: Side view with screw terminals; right: Side view with cable lug terminals

7KM PAC4200 dimensions

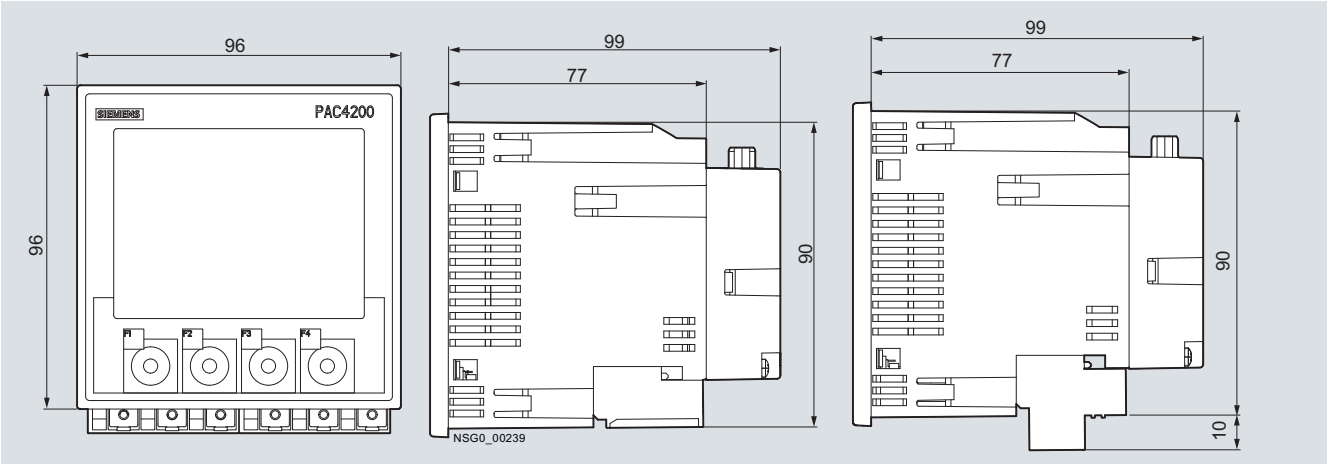

Left: Front view with cable lug terminals; middle: Side view with screw terminals; right: Side view with cable lug terminals

Panel cut-out on the 7KM PAC3200, side

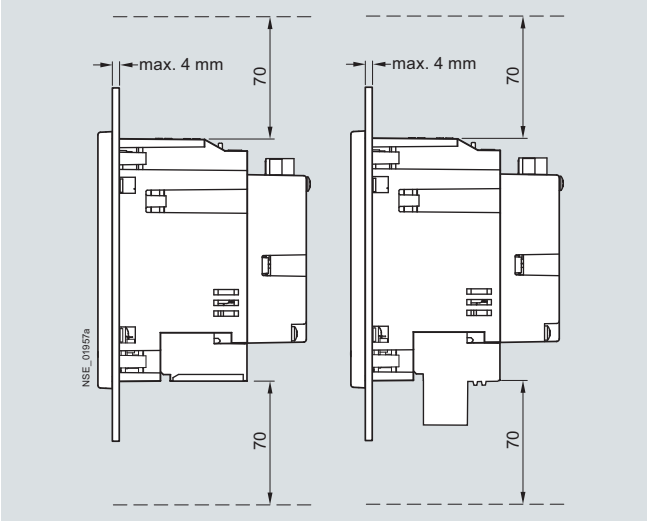

Left: 7KM PAC3200 with screw terminals,
right: 7KM PAC3200 with cable lug terminals

Panel cut-out on the 7KM PAC4200, side

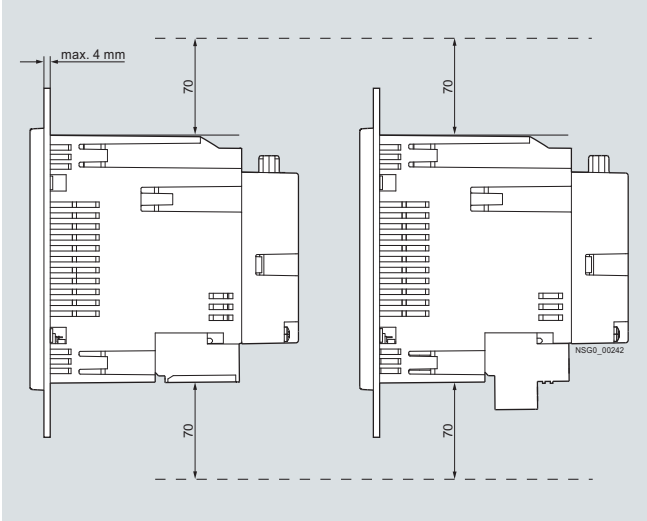

Left: 7KM PAC4200 with screw terminals,
right: 7KM PAC4200 with cable lug terminals

Switchboard cutout and mounting clearances for 7KM PAC3100, PAC3200 and 7KM PAC4200

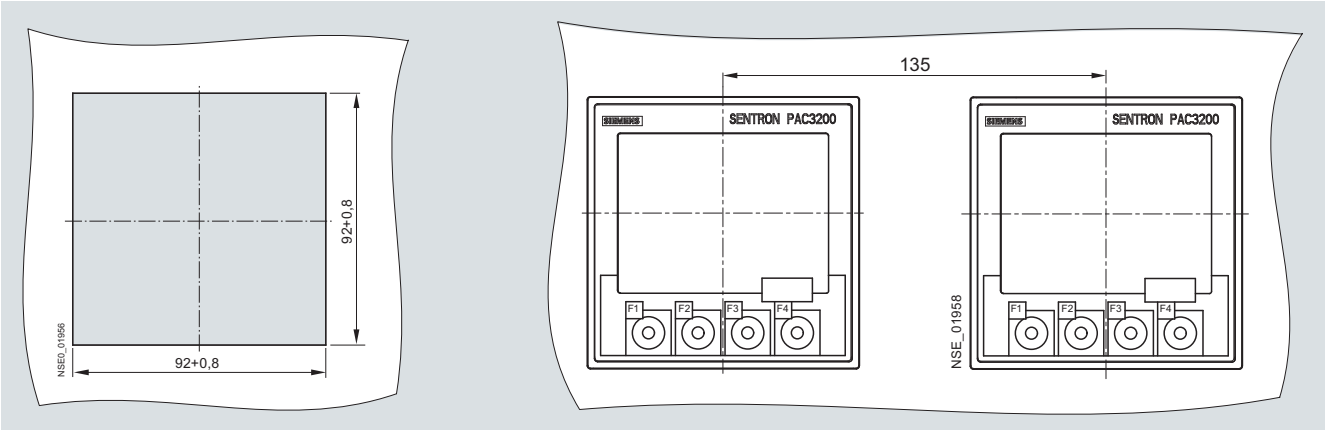

Left: Panel cut-out from the front right: Mounting clearances of two devices
(our example shows the 7KM PAC3200)

Schematics

Circuit examples

The following circuit examples apply to all measuring devices; 7KM PAC3100, PAC3200 und PAC4200

Note

In the examples, some elements are marked with one star (*) and/or two stars (**). These have the following significance

* Fuses must be provided by the user

** Connection of the supply voltage

Fuses

Protection of the supply voltage input:

Fuse holders	Cylindrical fuse links
3NW7-5130HG	3NW1006-0HG (0.6A)

Connection example 1:

Three-phase measurement, four conductors, asymmetric load, without voltage transformer, with three current transformers

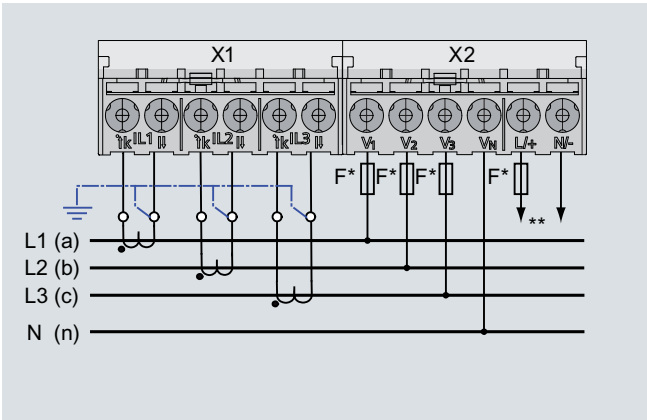

Technical data and configuration aids

Connection example 2:

Three-phase measurement, four conductors, asymmetric load, with voltage transformer, with three current transformers

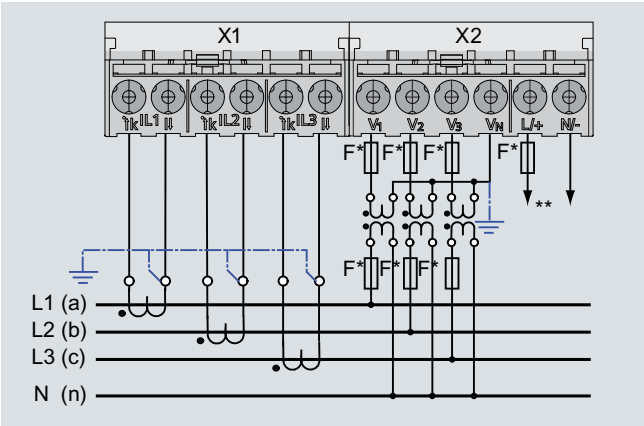

Connection example 3:

Three-phase measurement, four conductors, symmetric load, without voltage transformer, with one current transformer

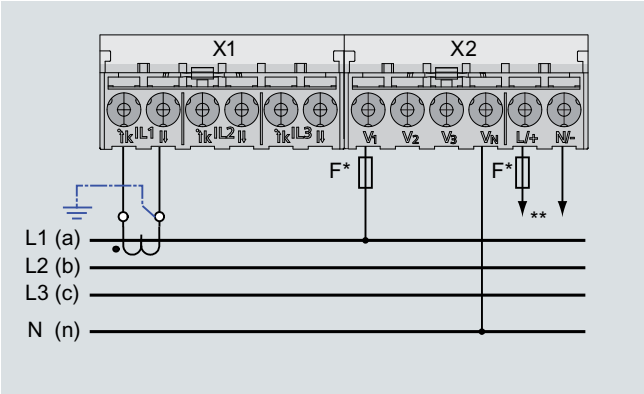

Connection example 4:

Three-phase measurement, four conductors, symmetric load, with voltage transformer, with one current transformer

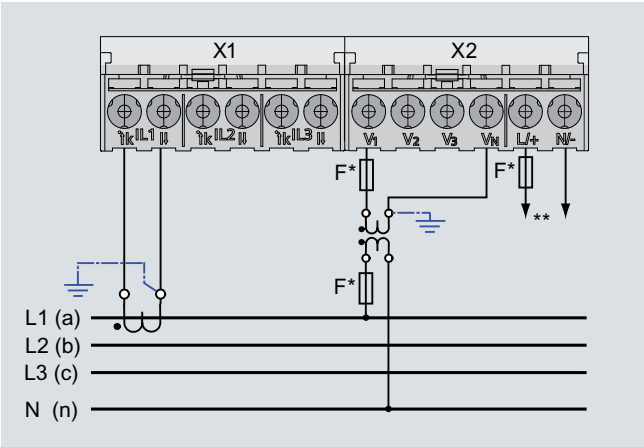

Connection example 5:

Three-phase measurement, three conductors, asymmetric load, without voltage transformer, with three current transformers

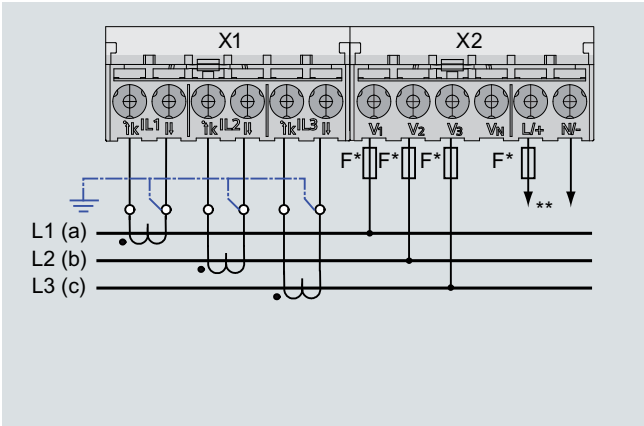

Connection example 6:

Three-phase measurement, three conductors, asymmetric load, with voltage transformer, with three current transformers

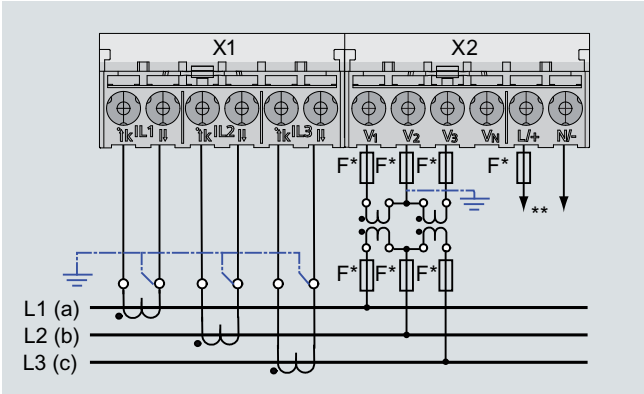

Connection example 7:

Three-phase measurement, three conductors, asymmetric load, without voltage transformer, with two current transformers

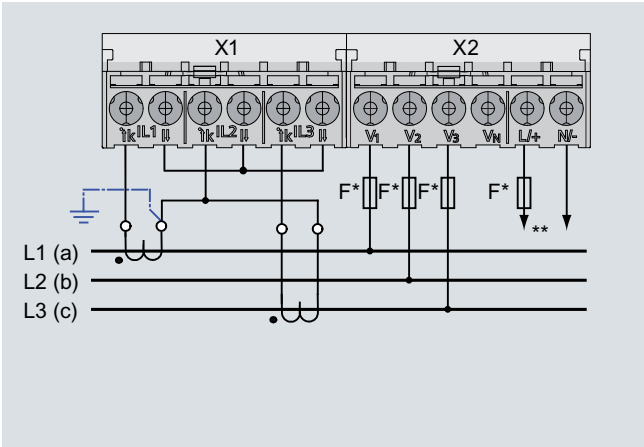

Connection example 8:

Three-phase measurement, three conductors, asymmetric load, with voltage transformer, with two current transformers

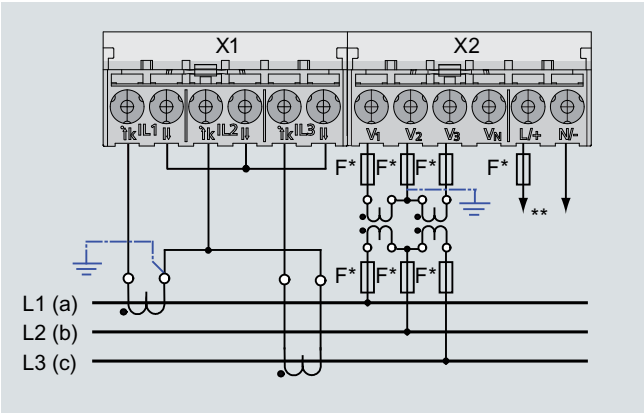

Connection example 9:

Three-phase measurement, three conductors, symmetric load, without voltage transformer, with one current transformer

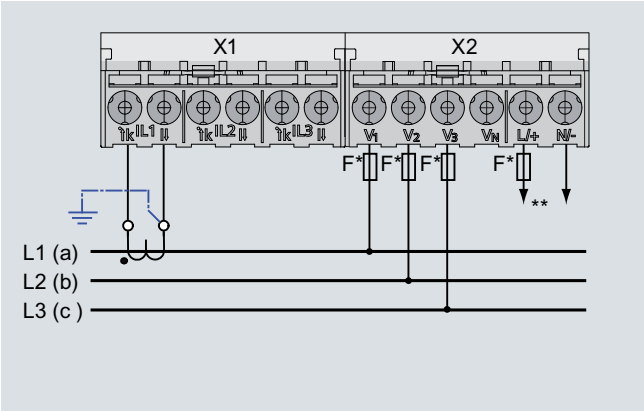

Connection example 10:

Three-phase measurement, three conductors, symmetric load, with voltage transformer, with one current transformer

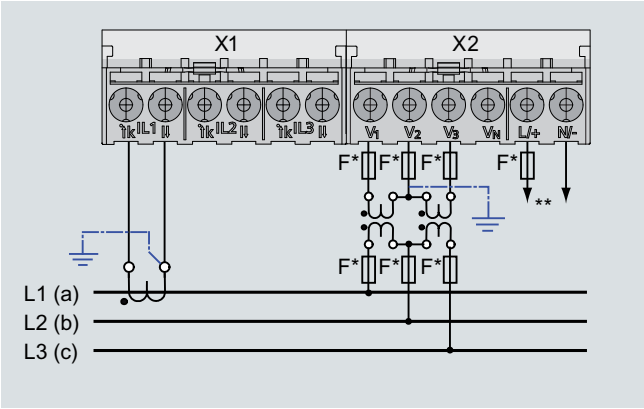

Connection example 11:

Two-phase measurement, three conductors, asymmetric load, without voltage transformer, with two current transformers

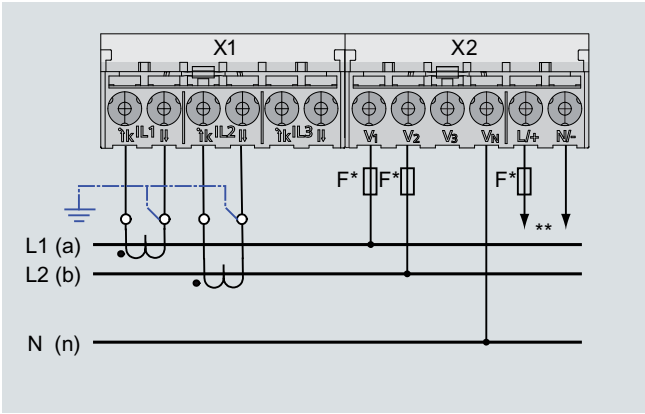

Connection example 12:

Single-phase measurement, two conductors, without voltage transformer, with one current transformer

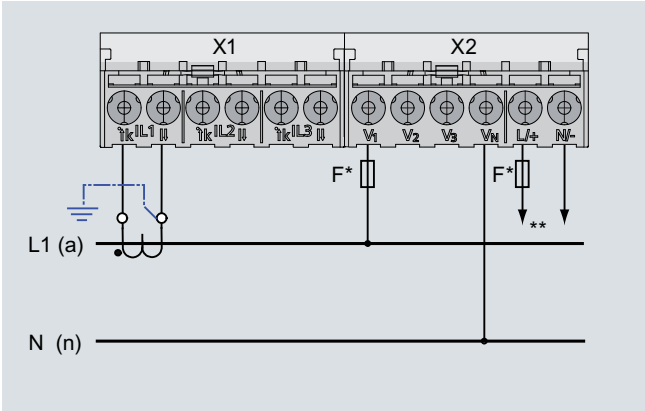

Connection example 13:

Three-phase measurement, four conductors, asymmetric load, with voltage transformer, with three current transformers

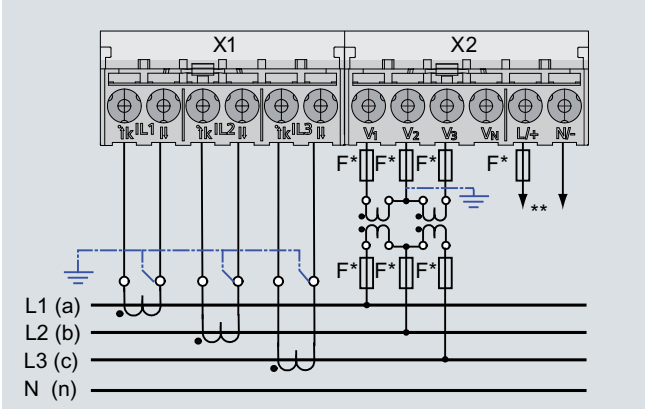

Technical data and configuration aids

Connection graphics

Connection graphics for 7KM PAC3100

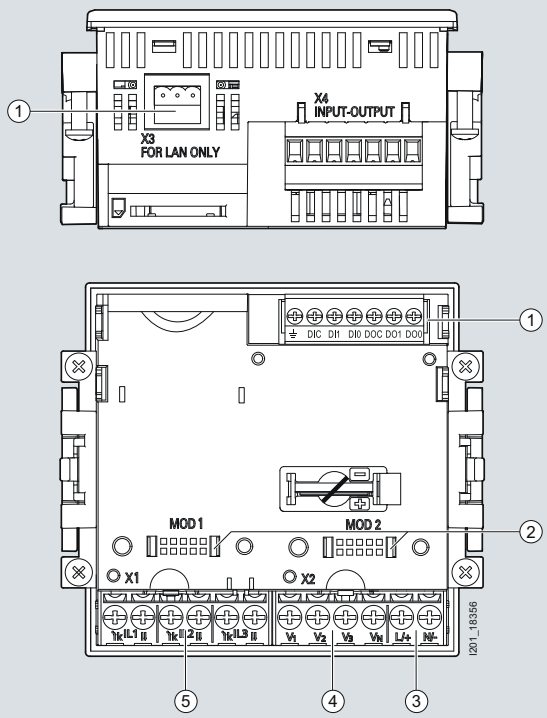

No.	Function
①	Digital inputs and outputs, functional ground
②	Slot not assigned
③	Supply voltage L/+, N/-
④	Measuring inputs voltage V1, V2, V3, VN
⑤	Measuring inputs current IL1, IL2, IL3
⑥	RS 485 terminals

7KM PAC3100 terminal assignment in overview
Top: Top side, bottom: Rear
Instrument with screw terminals

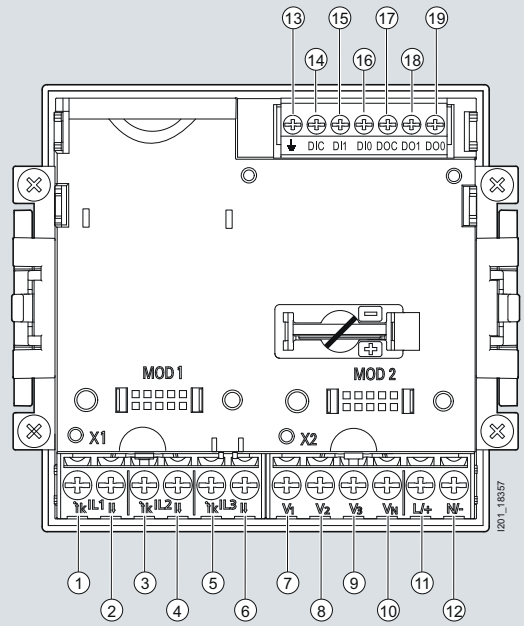

No.	Terminals	Function
①	IL1 k	Phase current, IL1, input
②	IL1 l	Phase current, IL1, output
③	IL2 k	Phase current, IL2, input
④	IL2 l	Phase current, IL2, output
⑤	IL3 k	Phase current, IL3, input
⑥	IL3 l	Phase current, IL3, output
⑦	V1	Phase voltage UL1
⑧	V2	Phase voltage UL2
⑨	V3	Phase voltage UL3
⑩	VN	Neutral conductor UN
⑪	L/+	AC: Connection: Conductor (phase voltage) DC: Connection: +
⑫	N/-	AC: Connection: Neutral conductor DC: Connection: -
⑬		Functional ground
⑭	DIC	Digital input (common)
⑮	DI1	Digital input 1
⑯	DI0	Digital input 0
⑰	DOC	Digital output (common)
⑱	DO1	Digital output 1
⑲	DO0	Digital output 0

7KM PAC3100 terminal assignment in detail (rear)
Devices with screw terminals

Connection graphics for 7KM PAC3200

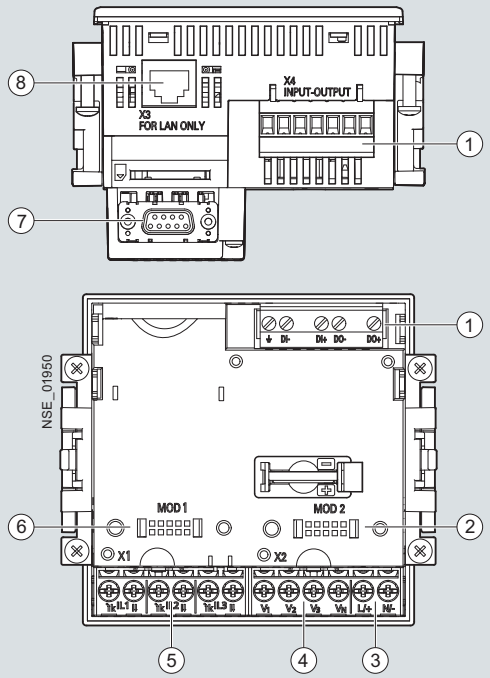

No.	Function
①	Digital inputs and outputs, functional ground
②	Slot not assigned
③	Supply voltage L/+, N/-
④	Measuring inputs voltage V1, V2, V3, VN
⑤	Measuring inputs current IL1, IL2, IL3
⑥	Slot for optional expansion modules
⑦	Optional expansion module, not included in the scope of supply
⑧	Ethernet interface

7KM PAC3200 terminal assignment in overview
Top: Top side, bottom: Rear
Instrument with screw terminals

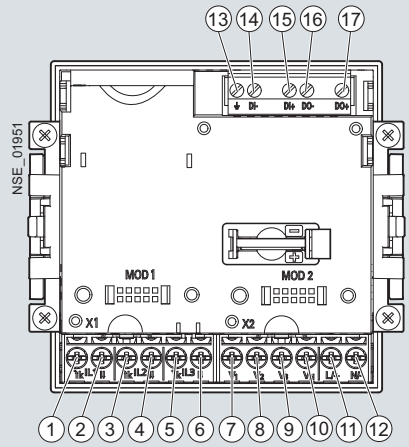

No.	Terminals	Function
①	IL1 k	Phase current, IL1, input
②	IL1 l	Phase current, IL1, output
③	IL2 k	Phase current, IL2, input
④	IL2 l	Phase current, IL2, output
⑤	IL3 k	Phase current, IL3, input
⑥	IL3 l	Phase current, IL3, output
⑦	V1	Phase voltage UL1
⑧	V2	Phase voltage UL2
⑨	V3	Phase voltage UL3
⑩	VN	Neutral conductor UN
⑪	L/+	AC: Connection: Conductor (phase voltage) DC: Connection: +
⑫	N/-	AC: Connection: Neutral conductor DC: Connection: -
⑬		Functional ground
⑭	DI-	Digital input -
⑮	DI+	Digital input +
⑯	DO-	Digital output -
⑰	DO+	Digital output +

7KM PAC3200 terminal assignment in detail (rear)
Devices with screw terminals

Technical data and configuration aids

Connection graphics for 7KM PAC4200

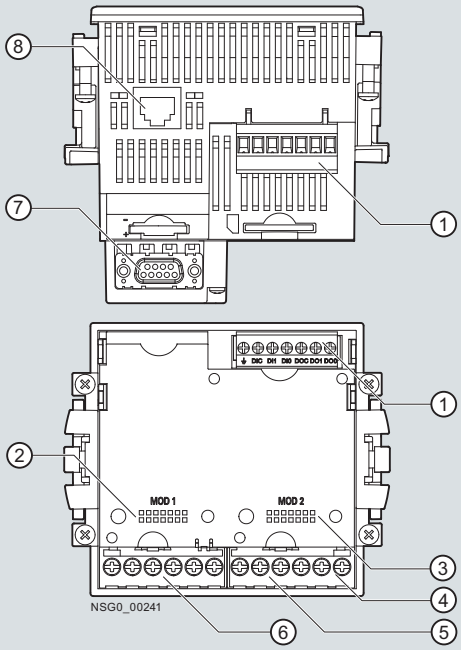

No.	Function
1	Digital inputs and outputs, functional ground
2	Slot for optional expansion modules
3	Slot for optional expansion modules
4	Supply voltage L/+, N/-
5	Measuring inputs voltage V1, V2, V3, VN
6	Measuring inputs current IL1, IL2, IL3
7	Optional expansion module, not included in the scope of supply
8	Ethernet interface

7KM PAC4200 terminal assignment in overview
Top: Top side, bottom: Rear
Instrument with screw terminals

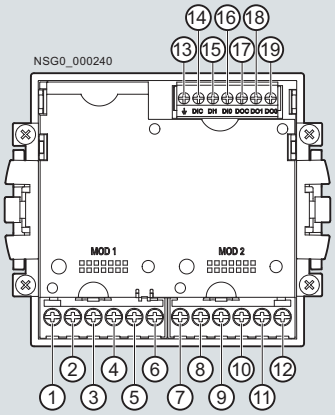

No.	Terminals	Function
1	IL1 k	Phase current, IL1, input
2	IL1 l	Phase current, IL1, output
3	IL2 k	Phase current, IL2, input
4	IL2 l	Phase current, IL2, output
5	IL3 k	Phase current, IL3, input
6	IL3 l	Phase current, IL3, output
7	V1	Phase voltage UL1
8	V2	Phase voltage UL2
9	V3	Phase voltage UL3
10	VN	Neutral conductor UN
11	L/+	AC: Connection: Conductor (phase voltage)
		DC: Connection: +
12	N/-	AC: Connection: Neutral conductor
		DC: Connection: -
13		Functional ground
14	DIC	Digital inputs (common)
15	DI1	Digital input 1
16	DI0	Digital input 0
17	DOC	Digital outputs (common)
18	DO1	Digital output 1
19	DO0	Digital output 0

7KM PAC4200 terminal assignment in detail (rear)
Devices with screw terminals

More information

Current transformers

Suitable current transformers can be found
- in Catalog LV 10.1 · 2012, chapter 2 "Molded case circuit breakers"
- In the Industry Mall, section
  "Industry Automation and Drive Technologies
  --> "Low-Voltage Power Distribution and
  Electrical Installation Technology"
  --> "Protection Equipment "
  --> "Molded Case Circuit Breakers"
  --> "3VL Molded Case Circuit Breakers"
  --> "3VL Molded Case Circuit Breakers up to 1600 A"
  --> "Accessories and Spare Parts"

Software components

For more information about the software components
see Catalog LV 10.1 · 2012, chapter 13 and on the Internet at
www.siemens.com/lowvoltage/energymanagement

Overview

From left to right:
7KM PAC Switched Ethernet PROFINET expansion module
7KM PAC PROFIBUS DP expansion module
7KM PAC RS485 expansion module
7KM PAC 4DI/2DO expansion module

Expansion modules act as communication interfaces for 7KM measuring devices.

Communication modules are plugged in at the back of the measuring device. The device identifies the module automatically and presents the relevant parameters for this module for selection in the parameterization menu.

7KM PAC Switched Ethernet PROFINET expansion module

The 7KM PAC Switched Ethernet PROFINET expansion module is a plug-in communication module for 7KM PAC3200 and PAC4200 measuring devices.

- Standardized PROFIenergy interface to the measured variables.
- The measured variables can be individually selected using a GSDML file. This enables the use of cost-effective S7-CPUs.
- Easy parameter assignment using the device display and STEP 7.
- Integrated Ethernet switching allows networking with short cables without additional switches.
- Direct integration in production machine networks using IRT (IRT = Isochronous-Real-Time).
- Full support of PROFINET IO (DHC, DNS, SNMP, SNTP)
- Device replacement without PG in the PROFINET network using LLDP
- Deterministic reversing time through ring redundancy (MRP)
- Modbus TCP for communication with 7KM powermanager or powerconfig
- 2 x Ethernet (RJ45) sockets
- Baud rates 10 and 100 Mbit/s
- Protocols PROFINET IO, PROFIenergy and Modbus TCP
- No external auxiliary power necessary
- Additional display via the device display and via LEDs on the module

All measured quantities from 7KM PAC3200 and PAC4200 are individually selected and cyclically transmitted by means of the GSDML file. This enables optimum use of the process image of the PROFINET controller, e. g. CPU 315-2 PN/DP of SIMATIC S7.

The measured variables can be read out in acyclic mode using PROFIenergy, a PNO protocol profile. Thanks to PROFIenergy, it is possible to assemble a power management system with devices from various manufacturers using PROFINET.

7KM PAC PROFIBUS DP expansion module

The PAC PROFIBUS DP expansion module has the following features:

- Pluggable communication modules for 7KM PAC3200 and PAC4200 measuring devices
- Parameterizable from the front of the device or using parameterization software
- Using PROFIBUS DPV1, data can be transferred in both cyclic and acyclic modes
- Easy engineering thanks to integration in SIMATIC STEP 7 and/or simple integration via GSD file for other programming systems
- Optimum use of a control system's process image for selection of individual measured values for cyclical transfer
- Supports all baud rates from 9.6 kbit/s up to 12 Mbit/s
- Connection through 9-pole Sub-D connector according to IEC 61158
- No external auxiliary power necessary
- Additional display via the device display and via LEDs on the module

7KM PAC RS485 expansion module

The 7KM PAC RS485 expansion module offers the following features:

- Plug-in 7KM PAC RS485 communication module for 7KM PAC3200 and PAC4200 measuring devices
- Parameterizable from the front of the device or using parameterization software
- Support for the Modbus RTU protocol
- Plug and play
- Supports baud rates 4.8 / 9.6 / 19.2 and 38.4 kbit/s.
- Connection by means of 6-pole screw terminals
- No external auxiliary power necessary
- Status indication by LED on the module

The 7KM PAC RS 485 expansion module is required for the gateway function of the 7KM PAC4200 in order to access simple devices with RS 485 interface, such as the 7KM PAC3100, via Ethernet (Modbus TCP).

7KM PAC 4DI/2DO expansion module

The 7KM PAC 4DI/2DO expansion module is used to expand the 7KM PAC4200 measuring device to up to 10 digital inputs and 6 digital outputs.
It offers the following features:

- Up to two 7KM PAC 4DI/2DO modules can be plugged onto a 7KM PAC4200.
- The 7KM PAC 4DI/2DO modules mean that the internal digital inputs and outputs can be expanded by up to 8 inputs and 4 outputs.
- The 7KM 4DI/2DO expansion modules can be parameterized via the front of the device or via the powerconfig configuration software.
- The digital inputs can be used without external voltage sources. They are self-powered.
- All functions of the integrated multifunctional inputs/outputs on the 7KM PAC4200 are also available in the 7KM PAC 4DI/2DO expansion module.
- Inputs and outputs can be used as an S0 interface conforming to IEC 62053-31.
- The connection is made via a 9-pole screw terminal.
- No external auxiliary power supply is required.

Expansion modules for 7KM PAC
Switched Ethernet PROFINET expansion module

Technical specifications

Communication		
Industrial Ethernet:		10/100 Mbit/s
Integrated IRT-capable switch		Auto crossover
With 2 x 8-pole RJ 45- sockets		Auto negotiation
Power supply		
		of 7KM PAC measuring device
Dimensions and weights		
Enclosure dimensions (W x H x D)		
Module enclosure for plug-in mounting	mm	43 x 63 x 22
Weight approx.	g	36
Degree of protection		
Degree of protection to EN 60529		IP20
Ambient conditions		
Temperature range		
Operating temperature	°C	-10 … + 55
Storage and transport temperature	°C	-25 … + 70
Relative humidity		
At 25 °C without condensation	%	95
Operating altitude		
Above sea level up to max.	m	2000
Degree of pollution		2

Dimensional drawings

Dimensions of SWITCHED ETHERNET PROFINET expansion module at the side and from above

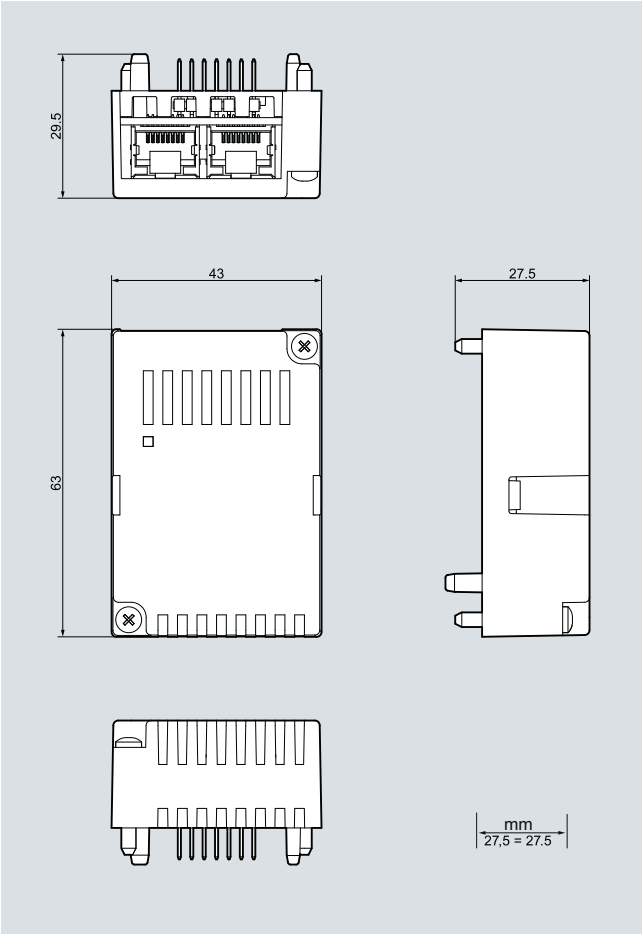

Technical specifications

Communication		
PROFIBUS DP		
Transmission rate max.	MBit/s	12
Protocol		PROFIBUS DPV1
Variables to be transmitted		Definable using GSD file
Dimensions and weights		
Enclosure dimensions (W x H x D)		
Module enclosure for plug-in mounting	mm	43 x 63 x 22
Weight approx.	g	45
Degree of protection		
Degree of protection to EN 60529		IP20
Ambient conditions		
Temperature range		
operating temperature	°C	-10 … + 55
Storage and transport temperature	°C	-25 … + 70
Relative humidity		
At 25 °C without condensation	%	95
Operating altitude		
Above sea level up to max.	m	2000
Degree of pollution		2

Dimensional drawings

Dimensions of 7KM PAC PROFIBUS DP expansion module at the side and from above

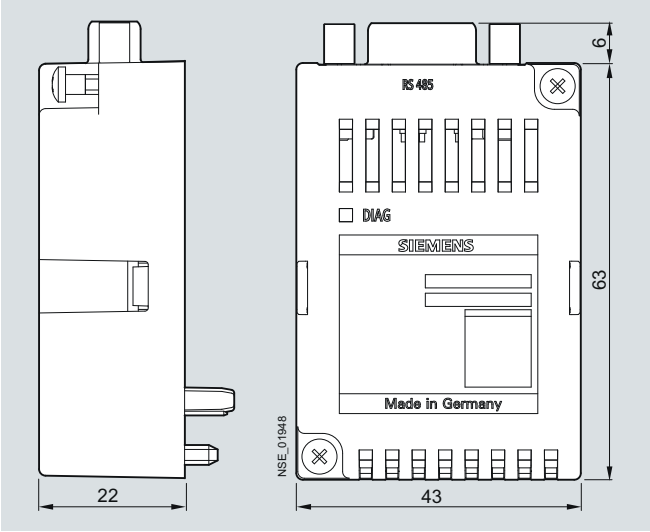

Dimensions of the plug connector between the 7KM PAC PROFIBUS DP expansion module and the 7KM PAC measuring device

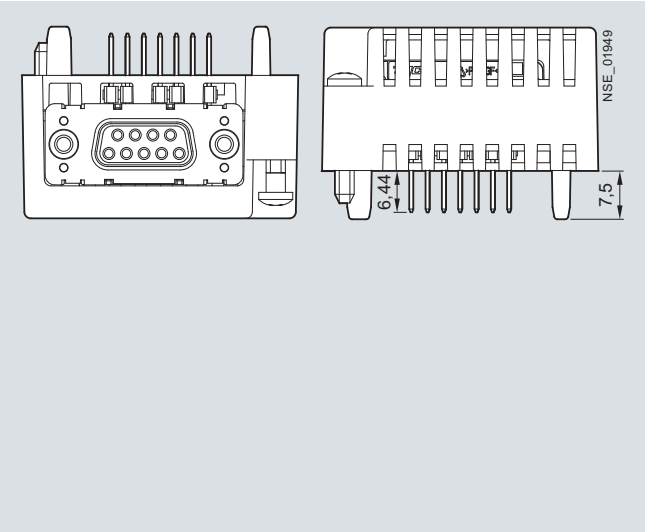

More information

Software components

For more information about the software components
see Catalog LV 10.1 · 2012, chapter 13 and on the Internet at
www.siemens.com/lowvoltage/energymanagement

Technical specifications

Communication		
RS485		
Transmission rates	kBd	Optionally 4.8 /9.6 /19.2 / 38.4
Protocol		Optionally SEAbus or Modbus RTU (selectable)
Dimensions and weights		
Enclosure dimensions (W x H x D)		
Module enclosure for plug-in mounting	mm	43 x 63 x 22
Weight approx.	g	41
Degree of protection		
Degree of protection to EN 60529		IP20
Ambient conditions		
Temperature range		
Operating temperature	°C	-10 … + 55
Storage and transport temperature	°C	-25 … + 70
Relative humidity		
At 25 °C without condensation	%	95
Operating altitude		
Above sea level up to max.	m	2000
Degree of pollution		2

Dimensional drawings

Dimensions of 7KM PAC RS485 expansion module at the side and from above

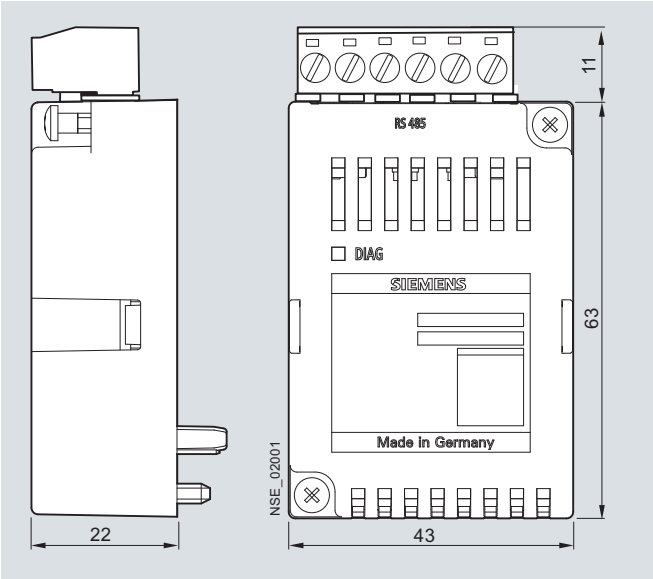

Dimensions of the plug connector between the 7KM PAC RS485 expansion module and the 7KM PAC measuring device

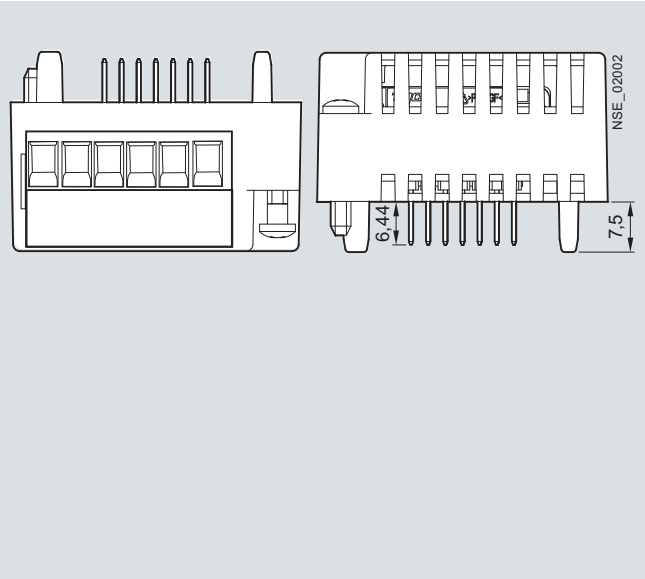

More information

Software components

For more information about the software components
see Catalog LV 10.1 · 2012, chapter 13 and on the Internet at
www.siemens.com/lowvoltage/energymanagement

Technical specifications

Inputs/outputs		
Digital outputs		
Number		4
Type		self-powered
Version / function		Switch or pulse output acc. to IEC 62053-31 Class B
External operational voltage		0 ... 30 V DC, (optional))
Input resistance		
• Signal "1" detection.		≤ 1 kΩ
• Signal "0" detection		≥ 100 kΩ
Input resistance		
• Signal "1" detection		≥ 2.5 mA
• Signal "0" detection		≤ 0.5 mA
Digital outputs		
Number		2
Type		bidirectional
Version / function		Switch or pulse output acc. to IEC 62053-31 Class B
Rated voltage		0 ... 30 V DC, typical 24 V DC (SELV or PELV supply)
Outgoing current for signal "1"		
• Continuous load		≤ 50 mA (internal resistance 55 Ω)
• Short-time overload		≤ 130 mA for 100 ms
Outgoing current for signal "0"		
• Continuous load		≤ 0.2 mA
• Short-time overload		≤ 130 mA for 100 ms
Dimensions and weights		
Enclosure dimensions (W x H x D)		
Module enclosure for plug-in mounting	mm	43 x 63 x 22
Weight approx.	g	38
Degree of protection		
Degree of protection to EN 60529		IP20
Ambient conditions		
Temperature range		
operating temperature	°C	-10 … + 55
Storage and transport temperature	°C	-25 … + 70
Relative humidity		
At 25 °C without condensation	%	95
Operating altitude		
Above sea level up to max.	m	2000
Degree of pollution		2

Dimensional drawings

Dimensions of 7KM PAC 4DI/2DO expansion module at the side and from above

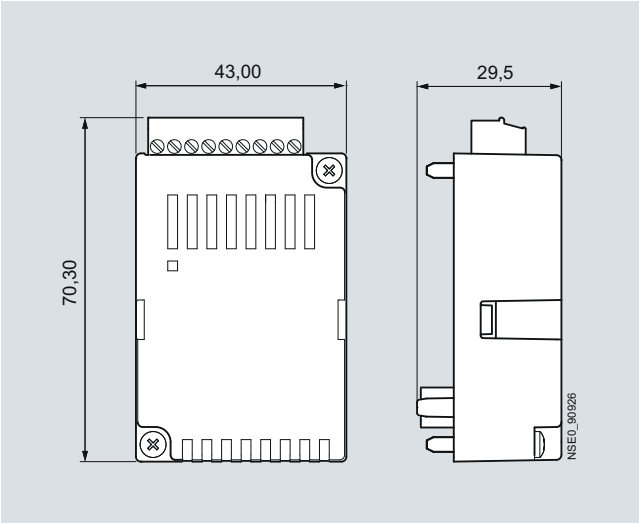

7KT PAC1500 three-phase counters

Overview

7KT PAC 1500 (7KT1 543) 3-phase counters for direct connection up to 80 A

The counters (power meters) are used to record the amount of electrical energy exported or imported. Siemens compact counters are designed as modular devices for alternating current and can be mounted on standard mounting rails. They comply with the counter standard EN 50470 (Part 1 and 3) and come with an LCD display.

Three-phase counters are available for direct connection up to 125 A and in versions with transformer connections (…/5 A to 10000/5 A).

The counters store active and reactive energy and they all comply with accuracy class 1 (for active energy).

All counters have a pulse output (S0) and are designed for 2-tariff measurements. The calibrated versions are in accordance with the new Measuring Instruments Directive 2004/22/EC (MID).

The counters also have an integrated optical interface (IrDA) for connecting communication modules, which enables their integration in a range of other systems, such as power management systems.

Technical specifications

7KT PAC1500 three-phase counters			7KT1 540 7KT1 542	7KT1 543 7KT1 545	7KT1 546 7KT1 548
Standards			EN 50470-1, EN 50470-3, EN 62053-23, EN 62053-31		
Connection					
• Direct connection			--	80 A	125 A
• Transformer current connection			.../5 A	--	--
General data					
• Enclosures	Acc. to DIN 43880	MW	4	4	6
• Mounting	Acc. to EN 60715		35 mm		
• Mounting height		mm	70		
Function					
• Connection	Single-phase or three-phase	Conductors	4	2 ... 4	2 ... 4
• Storage of setting and counter reading	Through (EEPROM)		Yes	Yes	Yes
• Rate	For active and reactive energy		T1/T2	T1/T2	T1/T2
Supply (through measuring terminals)					
• Rated control supply voltage U_n		V AC	230		
• Voltage range		V	184 ... 276		
• Rated frequency f_n		Hz	50		
• Rated power dissipation P_v		VA (W)	≤ 8 (0.6)		
Measuring accuracy (at 23 ±1 °C)	Based on nominal value				
• Active energy and active power	Acc. to EN 50470-3		Class B		
• Reactive energy and reactive power	Acc. to EN 62053-23		Class 2		
Measuring inputs					
• Connection type			Transformer TA-TC .../5 A	Direct	Direct
• Voltage U_n	Phase/phase Phase/N	V V	400 230		
• Operating range voltage	Phase/phase Phase/N	V V	319 ... 480 184 ... 276		
• Current I_{ref}		A	--	5	5
• Current I_n		A	5	--	--
• Current I_{min}		A	0.05	0.25	0.25
• Operating range current (I_{st} … I_{max})	Direct connection Transformer connection	A A	-- 0.003 ... 6	0.015 ... 80 --	0.020 ... 125 --
• Transformer current	Primary current of the transformer Smallest input step	A A	5 ... 10000 5	-- --	-- --
• Frequency		Hz	50		
• Input ripple form			Sinusoidal		
• Operational starting current I_{st}		mA	3	15	20
S0 interface	Acc. to EN 62053-31				
• Pulse outputs for absorbed for active and reactive energy T1 + T2			Yes		
• Pulse count	For input current I_{max} Can be set on transformer	Pulses/kWh Pulses/kWh	-- 100 - 10 - 1	500 --	500 --
IR interface					
• At the side for connecting communication modules			M-Bus / Modbus RTU / RS 485 / KNX		

Dimensional drawings

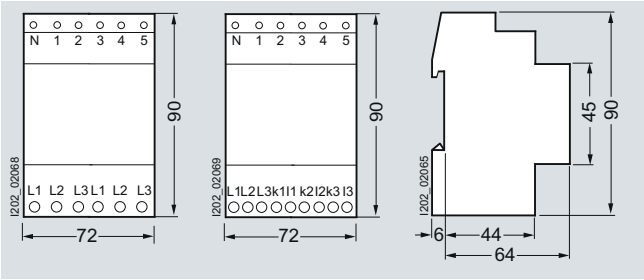

7KT1 543
7KT1 545

7KT1 540

Schematics

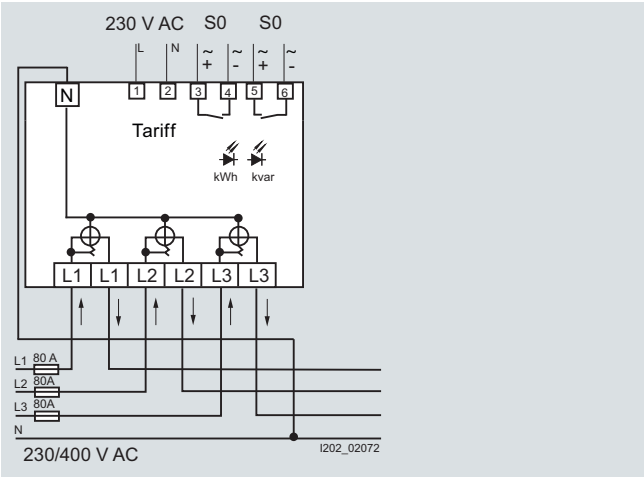

7KT1 543, 7KT1 545, three-phase connection

To achieve the specified accuracy, the N conductor must be connected to the counter.

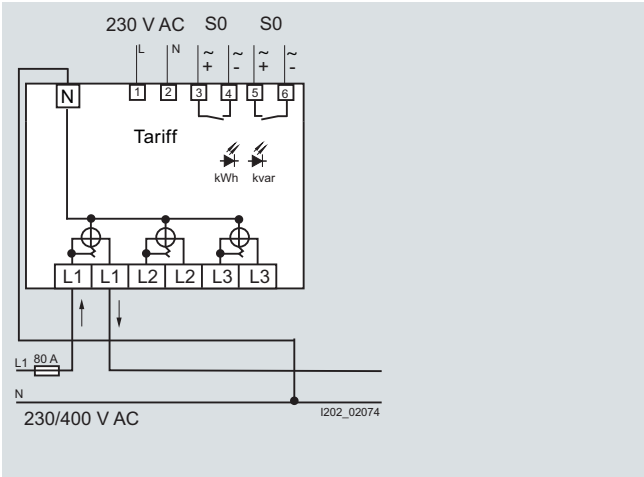

7KT1 543, 7KT1 545, single-phase connection

With single-phase connection the display lighting cannot be activated.

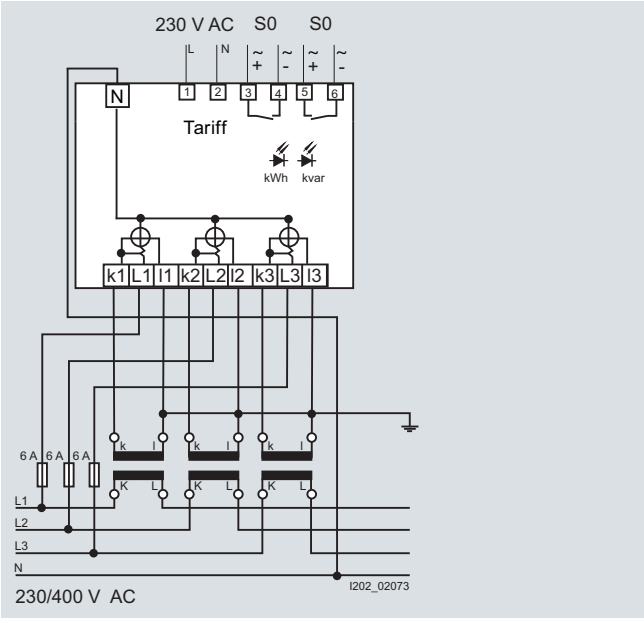

7KT1 540

More information

Illustration of the display

- Green, backlit LCD
- The control button is used to select the different display levels.

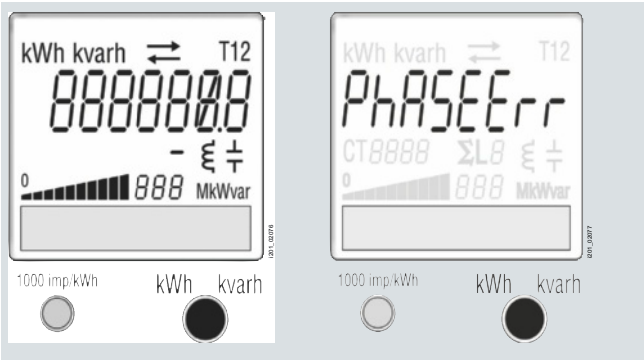

Connection error and phase failure

kWh Kvarh	kWh indicator kvarh indicator
⇄	Power import indicator Power export indicator
T12	Selected / active tariff
L8	Phase value of energy display (L1-2-3) and SL
ΣL	Phase total of energy display
ξ	Indicator for inductive power
⊥	Indicator for capacitive power
888	Indicator for active and reactive power
CT8888	Indicator for the current transformer ratio, primary side
	Bar diagram (in percent of I_{max})
	Device name and approval data
	LED accuracy check indicator
	Control button

Operation

The large number of measured quantities makes it necessary to present the data in 2 display levels:

A) Default and
B) E-counter states

A) Default display level

- The default display level shows the sum of the active and reactive energy:
  - Sum of active energy (E1-E2+E5-E6)
  - Sum of reactive energy (E3-E4+E7-E8)
  - Software version
  - Checksum
- The various measured quantities can be called up with a brief press of the control button.
- A 3-digit display indicates the instantaneous power. A bar display indicates the instantaneous current in steps of 10 % in relation to the maximum load rating (I_{max}) (transformer connection in relation to $I_{secondary}$). The bar display is updated every 2 s.
- Note:
  In this display level the symbol indicator (import/export) refers to the current power and not to the energy consumption value.

Display test control button

- If the control button is pressed and held for longer than 10 s, a display test will be activated.
- This test takes 30 s to complete. The DEFAULT display level then appears.

B) E-counter states display level

- This display level presents the energy values E1 to E8.
- To switch to the E1 to E8 energy values, press and hold the control button until the red LED lights up (approx. 4 s). The power indicators go out and the display shows the energy values E1-E8.
- A brief press of the control button enables these measured quantities to be shown in a loop.
- To return to the default display level, press and hold the control button for approx. 4 s or wait approx. 30 s for automatic switchover to the initial display.
- To view all the energy registers per phase (active and reactive energy for absorbed and generated energy for T1 and T2) in a loop, press the control button for 2 s.
- The display lighting is switched off automatically after 40 s of inactivity.

Resetting all energy registers

- If the control button is pressed and held for longer than 20 s, the word "RESET" will appear.
- After the control button is pressed again for at least another 4 seconds, all the energy registers are set to ZERO.

Overview

7KT1 53 digital counters

The 7KT PAC1500 counters (power meters) are used to record the amount of electrical energy exported or imported. They comply with the counter standard EN 50470 (Part 1 and 3) and come with an LCD display.

The PAC1500 single-phase counters for direct connection are available up to 80 A. They store both active and reactive energy and all comply with accuracy class 1 (for active energy).

All counters have a pulse output (S0) and are designed for 1-tariff or 2-tariff measurements, depending on the version.

The calibrated versions are in accordance with the new Measuring Instruments Directive 2004/22/EC (MID). At the same time the counters – except version 7KT1 530 – have an integrated optical interface (IrDA) for connecting communication modules.

Technical specifications

7KT PAC1500 single-phase counters, Direct connection up to 80 A			**7KT1 530**	**7KT1 531 7KT1 533**
Standards			EN 50470-1, EN 50470-3, EN 62053-23, EN 62053-31	
General data				
• Enclosures	Acc. to DIN 43880	MW	2	
• Mounting	Acc. to EN 60715		35 mm	
• Mounting height		mm	70	
Function				
• Operating mode	Single-phase loads	Conductors	2	
• Storage of setting and counter reading	Through (EEPROM)		Yes	
• Rate	For active energy For reactive energy		T1 T1	T1 + T2 T1 + T2
Supply (through measuring terminals)				
• Rated control supply voltage U_n		V AC	230	
• Voltage range		V	184 ... 276	
• Rated frequency f_n		Hz	50	
Measuring accuracy (at 23 ±1 °C)	Based on nominal value			
• Active energy and active power	Acc. to EN 50470-3		Class B	
• Reactive energy and reactive power	Acc. to EN 62053-23		Class 2	
Measuring inputs				
• Connection type	Phase/N		Direct	
• Operating range voltage	Phase/N	V AC	184 ... 276	
• Current I_{ref}		A	15	
• Current I_{min}		A	0.75	
• Operating range current (I_{st} ... I_{max})	Direct connection	A	0.025 ... 80	
• Frequency		Hz	50	
• Current waveform			Sinusoidal	
• Operational starting current I_{st}		mA	25	
S0 interface	Acc. to EN 62053-31			
• Pulse outputs for absorbed active and reactive energy			Yes	
• Pulse count		Pulses/kWh	1000	
IR interface				
• At the side for connecting communication modules (M-Bus / Modbus RTU / RS 485 / KNX)			--	Yes

7KT PAC1500 single-phase counters

Dimensional drawings

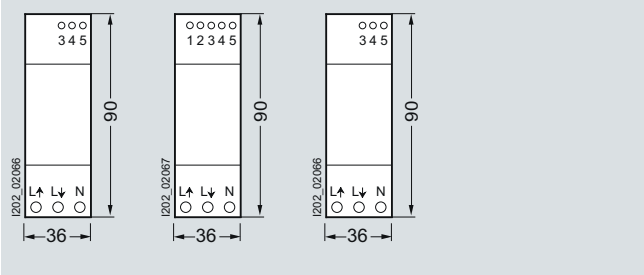

7KT1 530 7KT1 531, 7KT1 533

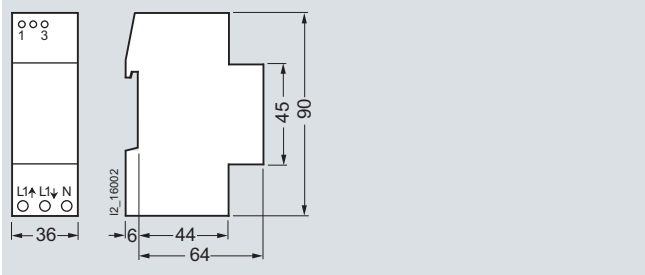

7KT1 140

Schematics

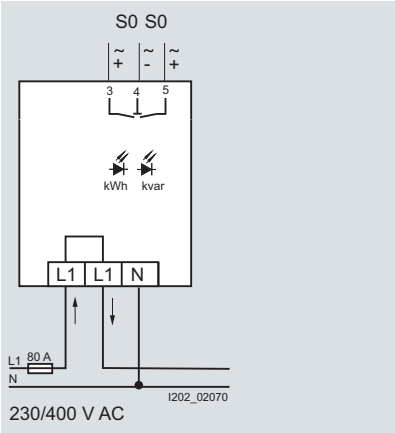

7KT1 530

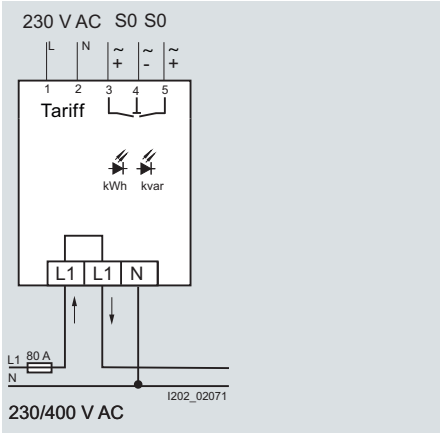

7KT1 531, 7KT1 533

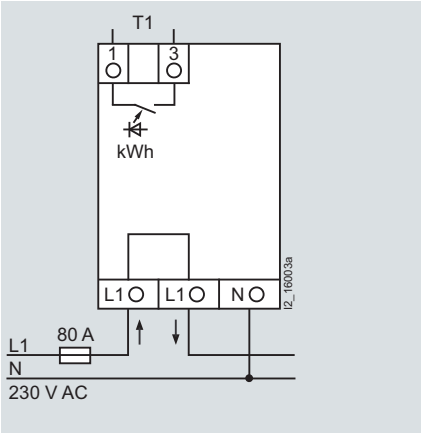

7KT1 140

More information

Digital 7KT1 53. single-phase E-counters, illustration of display

- Green, backlit LCD
- The control button is used to select the different display levels.

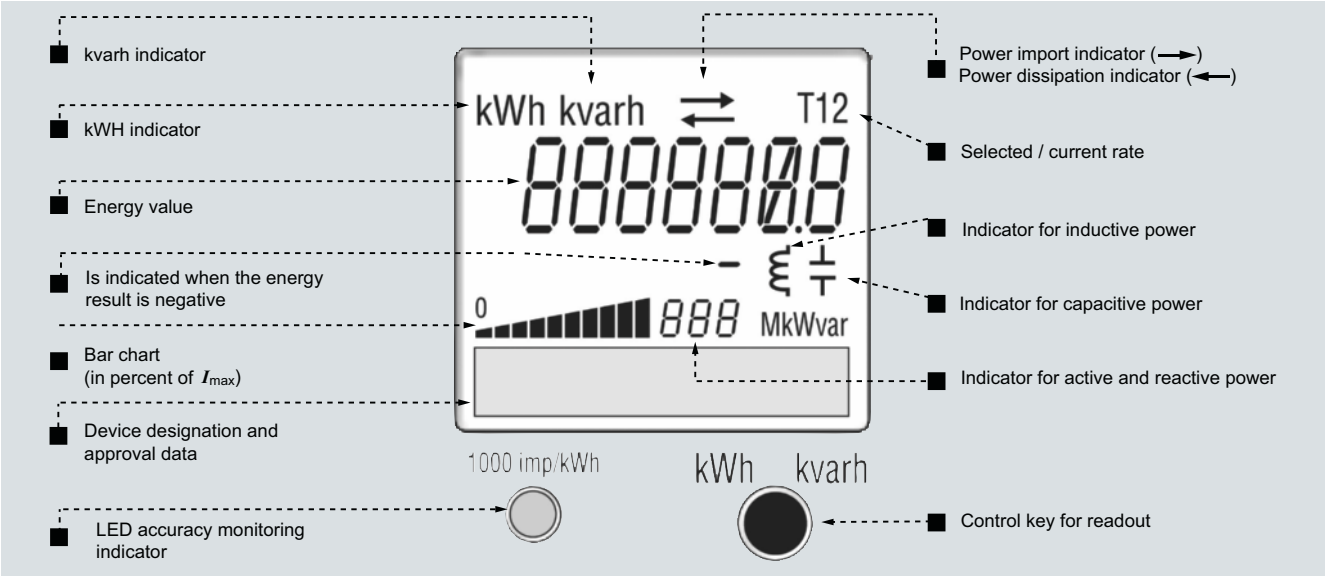

Operation

The large number of measured quantities makes it necessary to present the data in 2 display levels:

A) Default
B) E-counter states

A) Default display level

- The default display level shows the sum of the active and reactive energy:
  - Sum of active energy (E1-E2 for 7KT1 530 and E1-E2+E5-E6 for 7KT1 531, 7KT1 533)
  - Sum of reactive energy (E3-E4 for 7KT1 530 and E3-E4+E7-E8 for 7KT1 531, 7KT1 533)
  - Software version
  - Checksum
- The various measured quantities can be called up with a brief press of the control button.
- A 3-digit display indicates the instantaneous power. A bar display indicates the instantaneous current in steps of 10 % in relation to the maximum load rating (I_{max}). The bar display is updated every 1 second.
- Note:
  In this display level the symbol indicator (import/export) refers to the current power and not to the energy consumption value.

Display test control button

If the control button is pressed and held for longer than 10 s, a display test will be activated.

This test takes 30 s to complete. The DEFAULT display level then appears.

B) E-counter states display level

- This display level presents the energy values E1 to E8.
- To switch to this display level, press and hold the control button until the red LED lights up (approx. 4s). The power indicators disappear and the display shows the energy values E1-E8.
- A brief press of the control button enables the loop display of these measured quantities.
- To return to the default display level, press and hold the control button for 4 seconds.
- The display lighting is switched off automatically after 40 s of inactivity.

Resetting of all energy registers (except for 7KT1 533)

If the control button is pressed and held for longer than 20 s, the word "reset" will appear.

Pressing the control button again for at least another 4 seconds, resets all the energy registers to ZERO.

Expansion modules for 7KM PAC counters

Overview

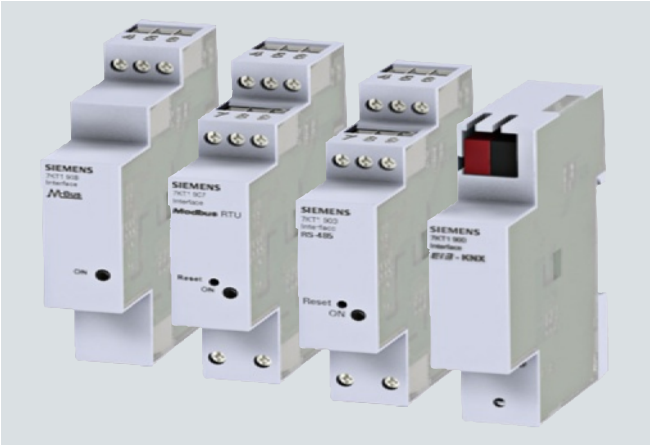

Expansion modules for 7KT PAC1500 counters, from left to right:
Expansion modules for M-Bus, Modbus RTU, RS 485 and Instabus KNX

Expansion modules are used as communication interfaces for 7KT PAC1500 counters. They have the following features:

- The expansion modules can be selected independently of the counter. These can also be retrofitted to existing measuring devices.
- Data transmission between the counters and the expansion modules is executed via the IrDA infrared interface.
- The expansion modules are placed alongside the counters in the installation direction so that their IrDA interfaces are exactly opposite each other.

M-Bus expansion modules (7KT1 908)

- Power supply through bus cable
- Baud rates: 300 to 9,600 kbit/s
- Status indication by LED on the module
- Can be parameterized using M-Bus Master software

Modbus expansion modules (7KT1 907)

- Power supply: 230 V AC
- Baud rates: 4.8 / 9.6 / 19.2 and 38.4 kbit/s are supported.
- Status indication by LED on the module
- Can be parameterized using RS-485 Master software

RS -485 expansion modules (7KT1 903)

- Power supply: 230 V AC
- Status indication by LED on the module

7KNX/EIB expansion modules (7KT1 900)

- Power supply through the KNX/EIB bus cable
- Status indication by LED on the module

Dimensional drawings

M-Bus expansion modules (7KT1 908)

For dimensional drawings, go to

http://support.automation.siemens.com/WW/view/en/39963313/td

Modbus expansion modules (7KT1 907)

For dimensional drawings, go to

http://support.automation.siemens.com/WW/view/en/42261531/td

RS -485 expansion modules (7KT1 903)

For dimensional drawings, go to

http://support.automation.siemens.com/WW/view/en/45510722/td

7KNX/EIB expansion modules (7KT1 900)

For dimensional drawings, go to

http://support.automation.siemens.com/WW/view/en/46373272/td

Overview

7KT PAC3000 measuring devices

Features

- Measuring devices with LED display
- For direct (80A) and transformer connection (/5A)
- Display of up to 38 measured values
- 9 display levels, each with 6 display units (one level freely configurable)
- Password-protected menu setting
- S0 pulse output
- Integrated RS485 interface (for connecting to the 7KT1391 LAN coupler or communication using Modbus RTU)

Technical specifications

7KT PAC3000 measuring devices without communication **7KT PAC3000 multicounters with RS 485 interface (Modbus RTU / LAN couplers)**			**7KT1 310** **7KT1 340**	**7KT1 311** **7KT1 341**
Standards			EN 50470-1, EN 50470-3, EN 62053-23, EN 62053-31, IEC 61010-1	
General data				
• Enclosures	Acc. to DIN 43880		6 modules	
• Mounting	Acc. to EN 60715		35 mm	
• Mounting height		mm	70	
Supply				
• Rated control supply voltage U_n		V AC	230	
• Primary operating range		× U_n	0.8 ... 1.2	
• Rated frequency		Hz	50	
• Rated power dissipation P_v		VA	< 5	
Measuring accuracy				
• Voltage		%	± 1	
• Current		%	± 2	
• Power outputs		%	± 1	
• Active energy	Acc. to IEC 50470-3		Class B	
• Reactive energy	Acc. to IEC 62053-23		Class 2	
• p.f.		%	± 2	
• Frequency		%	± 0.2	
Measuring inputs				
• Connection type			Direct	Transformers /5 A
• Voltage U_n	Phase/phase Phase/N	V V	400 230	
• Operating range voltage	Phase/phase Phase/N	V V	87 ... 480 50 ... 276	
• Current I_n / I_{ref}		A	5	1 or 5
• Operating range current		A	0.0015 ... 80	0.003 ... 6
• Transformer current	Primary current of the transformer Smallest input step	A A	-- --	5 ... 10000 1 or 5
• Frequency		Hz	50	
S0 interface	Acc. to IEC 62053-31		Class A	
• Pulse outputs	For active and reactive energy T1 and T2		Yes	Yes
• Pulse count	At 80 A, max. Depending on the transformer factor, adjustable, max.	Pulses/kWh Pulses/kWh	500 --	-- 10000
Modbus RTU interface (only for 7KT1 340 - 7KT1 341)				
• Transmission rate		kbit/s	9.6-19.2	9.6-19.2
Ambient conditions				
• Mechanical environment			M1	
• Electromagnetic environment			E2	
• operating temperature		°C	-10 ... +55	
• Temperature limits for storage and transport		°C	-25 ... +70	
• Relative humidity (without condensation)		%	< 80	
• Vibrations	Sinus amplitude at 50 Hz	mm	± 0.075	
• Degree of protection	Installed device, front side/terminals		IP51[1)]/PI20	

[1)] For installation in a distribution board with at least IP51 degree of protection.

7KT PAC3000 measuring devices

Dimensional drawings

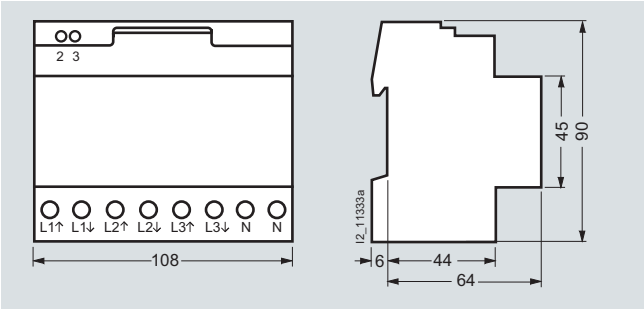

7KT1 300

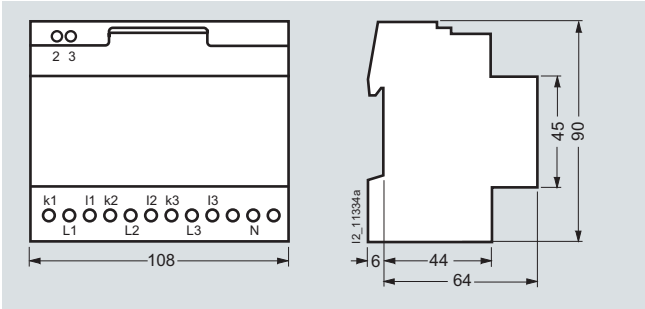

7KT1 301

Schematics

Instructions for the connection of transformer counters

In the case of cross-section reduction, a short-circuit resistant cable is required for the power supply of terminal 2, depending on the fusing for phases L1, L2, L3. A fuse of 6 A is recommended for line protection.

Current transformers must not be operated with open terminals as dangerously high voltages can occur, which may cause personal injury and/or property damage. It may also lead to a thermal overload of the transformers.

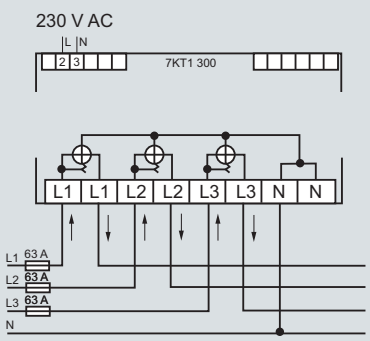

230/400 V AC
Direct connection 63 A, 4-wire circuit

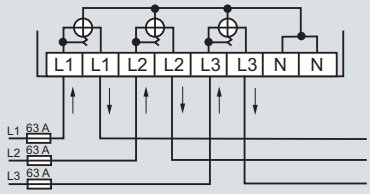

400 V AC
Direct connection 63 A, 3-wire circuit

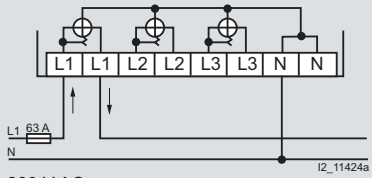

230 V AC
Direct connection 63 A, single-phase

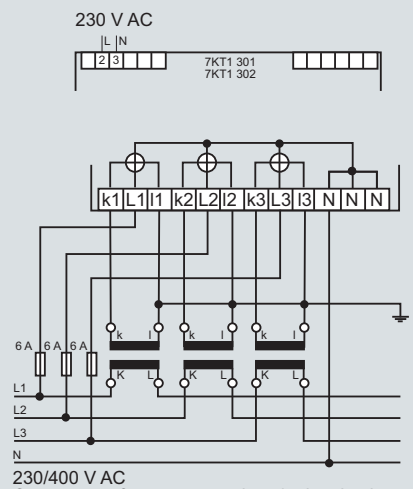

230/400 V AC
Current transformer connection, 4-wire circuit

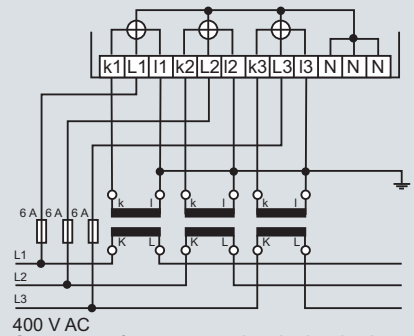

400 V AC
Current transformer connection, 3-wire circuit

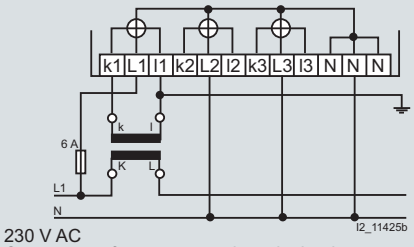

230 V AC
Current transformer connection, single-phase

More information

Voltage measurement

The multimeter measures the delta voltages L1 against L2; L2 against L3 and L3 against L1 or the star voltages L1, L2, L3 against N.

ΣL symbol for the 3-phase system

This indicates that all physical units shown under this symbol are always 3-phase.

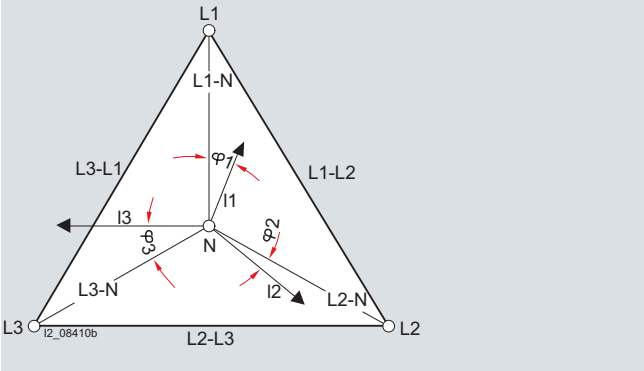

Readout data

You can continuously display 5 measured quantities from the following 23 options.

No.	Measured value	Display	Unit	Assignment
1	Active power	D1	W	L1
2	Voltage	D1	V	L1
3	Current	D1	A	L1
4	Apparent power	D1	VA	L1
5	p.f.	D1	p.f.	L1
6	Voltage	D1	V	L1 – L2
7	Active power	D2	W	L2
8	Voltage	D2	V	L2
9	Current	D2	A	L2
10	Apparent power	D2	VA	L2
11	p.f.	D2	p.f.	L2
12	Voltage	D2	V	L2 – L3
13	Active power	D3	W	L3
14	Voltage	D3	V	L3
15	Current	D3	A	L3
16	Apparent power	D3	VA	L3
17	p.f.	D3	p.f.	L3
18	Voltage	D3	V	L3 – L1
19	Active power	D1, D2, D3, D5	W	ΣL
20	Apparent power	D1, D2, D3, D5	VA	ΣL
21	Reactive power	D5	var	ΣL
22	Frequency	D4	Hz	ΣL
23	p.f.	D1, D2, D3, D4	p.f.	ΣL
2 set values are also indicated:				
24	Transformer setting	D5	CT/A	/5
25	Transformer setting		CT/A	5 ... 5000

Displays

The multimeters have a covered, brightly lit LED display. The measured values are indicated on an 11-mm high, green, 7-segment LED, the physical units are indicated by orange text abbreviations. Both colors are easier to recognize than the red LEDs used for conventional displays. Capacitive loads are automatically indicated by a capacitor symbol, inductive loads by a coil symbol – also in orange.

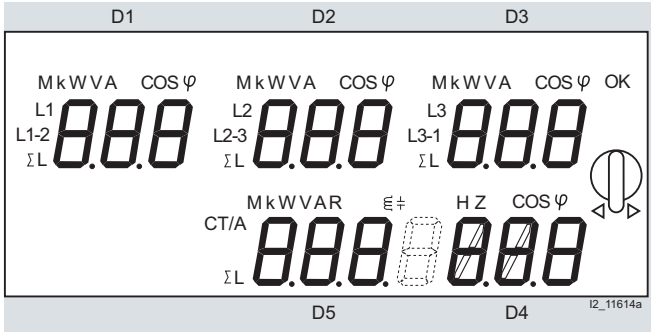

Matrix selection

Conventional measuring instruments display voltages, currents, powers, etc. in a rigid sequence on several "screens". These multimeters allow users to define their own standard for measured quantities per display field, so that they can be implemented far more universally and flexibly.

A special feature is the analysis of the different loads on the phases. Phase displacement and unsymmetrical or unbalanced loads can cause partial overloads. These multimeters offer a range of different options for combining and assessing measured values.

The display fields are selected using rotary pushbuttons and the desired indications confirmed with OK. By making the horizontal selection e. g. W V A or p.f., and the vertical selection, e. g. L1, L1–L2 or ΣL, users can then define the desired measured quantities for this display field.

The vertical data on the display can be assigned to any measured value in the horizontal data. The letters M(ega) and k(ilo) are automatically assigned according to measuring range, i. e. measured value, e. g. kW or MW. Capacitive loads are automatically indicated by a capacitor, inductive loads by a coil.

The following diagram shows an example of what your matrix selection might look like.

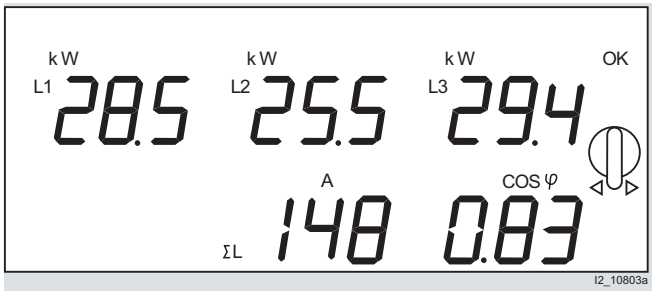

Digital volt and ammeter

Overview

Digital measuring devices: Left voltmeter 7KT1, right ammeter 7KT1

These devices for measuring voltages and currents can be used for monitoring incoming and outgoing currents or device currents in electric plants.

They are suitable for direct connection in a single-phase system or with measuring transducers in three-phase systems.

The measuring ranges of the ammeter are set at the device with a coding switch.

Technical specifications

			7KT1 110	7KT1 120
Standards			DIN 43751-1, -2	
Rated control supply voltage U_c		V AC	230	
Primary operating range		× U_c	0.9 ... 1.15	
Rated frequency		Hz	45 ... 65	
Measuring range				
• Voltage	Direct measurement	V AC	12 ... 600	--
• Current	Direct measurement Transformer measurement	A AC A AC	-- --	0.4 ... 20 direct 0.1 ... 1000/5
Measuring accuracy	At 23 °C	%	±0.5 ±1 digit	
Overload capability				
• Voltage	Continuous Short-time for 1 s	V V	720 780	-- --
• Current	Continuous, direct Continuous, transformer	A A	-- --	22 5.5
	Short-time for 1 s, direct Short-time for 1 s, transformer	A A	-- --	200 50
Terminals	±screw (Pozidriv)		1	
Conductor cross-sections	Rigid, max. Flexible, with end sleeve, min.	mm^2 mm^2	1 × 6/2 × 4 0.75	
Degree of protection			IP20, with connected conductors	

Dimensional drawings

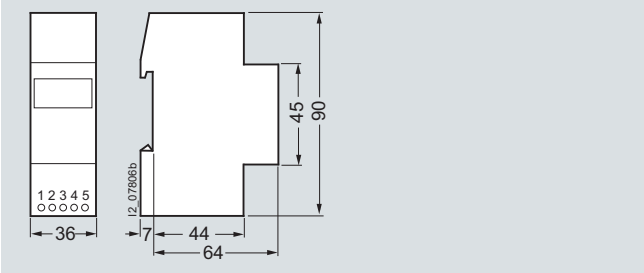

7KT1 110, 7KT1 120

Schematics

Switching examples

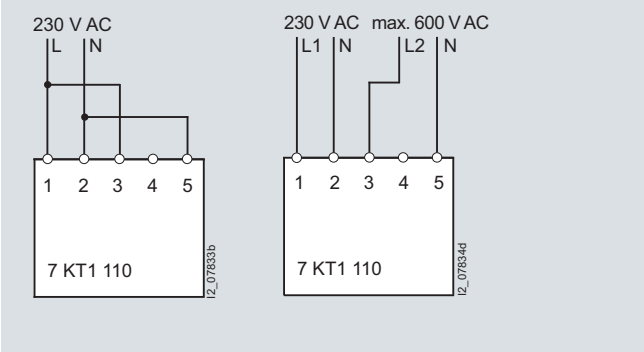

Digital voltmeters

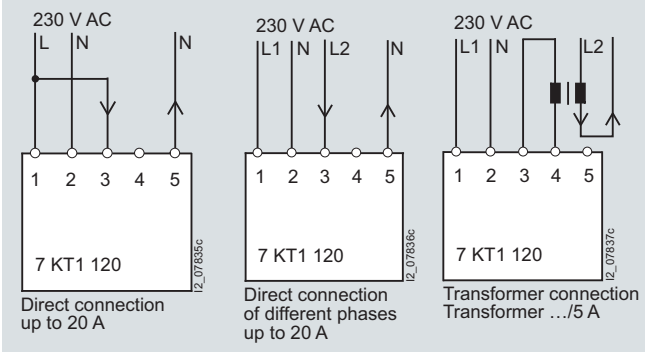

Digital ammeters

More information

Range selector switch for 7KT1 120 digital ammeter

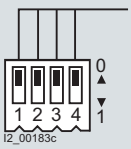

1 2 3 4			
Direct measurement			
0 0 0 0	20 A AC		
Transformer measurement			
1 0 0 0	25/5 A AC	0 0 0 1	200/5 A AC
0 1 0 0	40/5 A AC	1 0 0 1	250/5 A AC
1 1 0 0	50/5 A AC	0 1 0 1	400/5 A AC
0 0 1 0	60/5 A AC	1 1 0 1	500/5 A AC
1 0 1 0	80/5 A AC	0 0 1 1	600/5 A AC
0 1 1 0	100/5 A AC	1 0 1 1	800/5 A AC
1 1 1 0	150/5 A AC	0 1 1 1	999/5 A AC

Timer and pulse counter for standard rail mounting

Overview

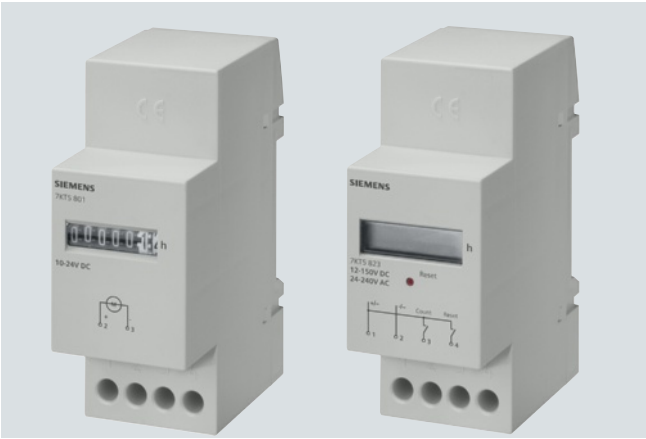

Time counters: Left: electromechanical, right: Electronic

Time and pulse counters are used for the reliable monitoring of production and service times, which enables the exact planning and monitoring of production sequences, maintenance cycles and warranty times.

As well as the proven electromechanical time and pulse counters for mounting in distribution boards, we also supply digital time and pulse counters.

The fields of application for both counter types are very diverse, such as the recording of operating hours of machines, systems or building management systems, as well as pulse counting for general volume flow counting, registration of starting frequencies, starting cycles or production quantities in systems and machines.

Technical specifications

			7KT5 801	7KT5 802	7KT5 803	7KT5 804	7KT5 806	7KT5 807
Standards **Approvals**			DIN VDE 0435-110; EN 60255-6; UL 863 UL 863, UL File No. E300537, CSA C22.2 No. 6 and 55					
Rated control supply voltage U_c		V AC V DC	-- 12 ... 24	24 --	115	230	115	230
Primary operating range	At 50/60 Hz	× U_c	0.9 ... 1.1					
Rated frequency		Hz	--	50			60	
Rated power dissipation P_v		VA	< 1		< 2			
Method of operation	Counting of		Hours					
Display	Drum-type register	h	00000.00					
Terminals	± screw (Phillips)		1					
Conductor cross-sections	Rigid Flexible, with end sleeve, min.	mm^2 mm^2	1.5 0.75					
Permissible ambient temperature		°C	-10 ... +70					
Degree of protection	Acc. to EN 60529		IP20, with connected conductors					
Safety class	Acc. to EN 61140/VDE 0140-1		II					
Permissible humidity		%	< 80					

			7KT5 811	7KT5 812	7KT5 814	7KT5 821	7KT5 822	7KT5 823	7KT5 833
Standards **Approvals**			DIN VDE 0435-110; EN 60255-6; UL 863 UL 863, UL File No. E300537, CSA C22.2 No. 6 and 55						
Rated control supply voltage U_c		V AC V DC	-- 12 ... 24	24 --	230 --	24 ... 240 12 ... 150			
Primary operating range	At 50/60 Hz	× U_c	0.9 ... 1.1						
Rated frequency		Hz	--	50/60					
Rated power dissipation P_v		VA	< 1		< 2	< 1			
Method of operation	Counting of		Pulses			Hours			Pulses
Display	Drum-type register LCD	⎍ h ⎍	0000000 -- --			-- 000000.0 --			-- -- 0000000
Counting frequency		Hz	10			--			10
Pulse duration		ms	50			--			50
Resetting	Electrical Mechanical		-- --				Yes	 Yes	
Terminals	± screw (Phillips)		1						
Conductor cross-sections	Rigid Flexible, with end sleeve, min.	mm^2 mm^2	1.5 0.75						
Permissible ambient temperature		°C	-10 ... +70						
Degree of protection	Acc. to EN 60529		IP20, with connected conductors						
Safety class	Acc. to EN 61140/VDE 0140-1		II						
Permissible humidity		%	< 80						

Dimensional drawings

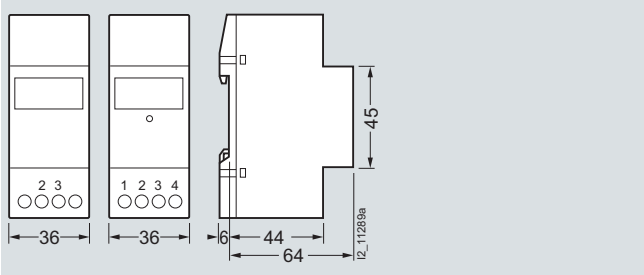

7KT5 80.
7KT5 81.

7KT5 82.
7KT5 833

Schematics

Connections

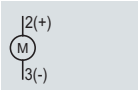

7KT5 801

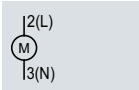

7KT5 802
7KT5 803
7KT5 804
7KT5 806
7KT5 807

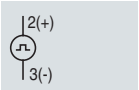

7KT5 811

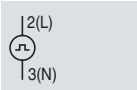

7KT5 812
7KT5 814

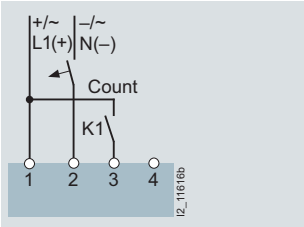

7KT5 821

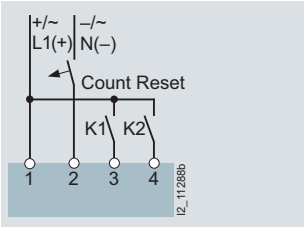

7KT5 822, 7KT5 823, 7KT5 833

More information

Time counters count the time in hours with an accuracy of two decimal places (hundredths of hours). The pulse counter adds the number of pulses, e. g. the making operations of devices.

A power supply is required at terminals 1 and 3 of the electronic counters so that the device can constantly display the measured values. Once terminal 3 is supplied with voltage (for DC "+"), the counting procedure starts. If terminal 4 is supplied short-time with voltage (for DC "+"), the counter is reset.

In the case of electronic counters, the counting result is saved indefinitely in the event of a power failure (EEPROM). On recovery of the power, the counting is continued from the saved value. As well as a modern design, the electronic counter has a 7-digit LCD, which can be reset electrically or manually.

Time counters for front-panel mounting

Overview

Time counters: Left: Counting mechanism, right: Counting mechanism with front frame

Time and pulse counters for control cabinets, control and mechanical engineering are used, e. g. in boilers, machine tools or compressors. The pulse counters count the starting frequencies. This supports planning for preventative maintenance.

In-time and regular maintenance is the best protection against unexpected shutdowns.

Technical specifications

			7KT5 500	7KT5 501	7KT5 502	7KT5 503	7KT5 504	7KT5 505
Standards			DIN VDE 0435-110; EN 60255-6					
Rated control supply voltage U_c		V AC V DC	-- 10 ... 80	115 --	230	115	230	24
Rated frequency		Hz	--	50		60		50
Front-panel mounting	Switchboard cutout							
• Without masking frame 55 mm × 55 mm		mm × mm	$45.2 \times 45.2^{+0.3}$					
• With masking frame 55 mm × 55 mm		Ø mm	$50.2^{+0.3}$					

			7KT5 600	7KT5 601	7KT5 602	7KT5 603	7KT5 604
Standards			DIN VDE 0435-110; EN 60255-6				
Rated control supply voltage U_c		V AC V DC	-- 10 ... 50	115 --	230	115	230
Rated frequency		Hz	--	50		60	
Front-panel mounting	Switchboard cutout	mm × mm	$68^{+0.5} \times 68^{+0.5}$				

Dimensional drawings

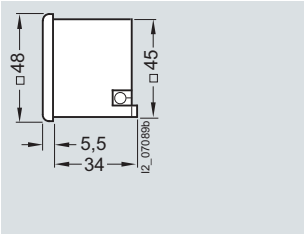

7KT5 5

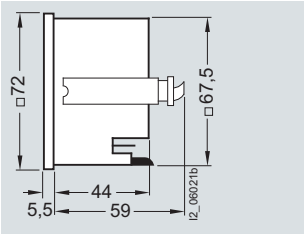

7KT5 6

Schematics

Connections

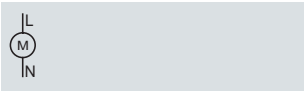

7KT5 5, 7KT5 6

Overview

7KT 391 LAN couplers

Provided a LAN connection to the Internet is available, a LAN coupler enables the retrieval of data from 7KT PAC measuring devices and counters around the globe.

Up to 30 devices can be connected to a LAN coupler via a web browser, such as Firefox. In turn, the LAN coupler is connected to a LAN.

Data communication between the LAN coupler and the PC takes place using the TCP/IP protocol.

Application

Suitable 7KT PAC measuring devices and counters

The following measuring devices and counters can be connected to the LAN coupler:

	Order No.
Energy counters	
7KT PAC1500 digital three-phase counters	
• For direct connection 80 A, double rate	7KT1 543
• For direct connection 80 A, double rate, calibrated version	7KT1 545
• For transformer connection .../5 A, double rate	7KT1 540
• For transformer connection ... /5 A, double rate, calibrated version	7KT1 542
• For direct connection 125 A, double rate	7KT1 546
• For direct connection 125 A, double rate, calibrated version	7KT1 548
• For direct connection 63 A, double rate	7KT1 520
• For transformer connection .../5 A, double rate	7KT1 521
• Digital 1-phase counters	
• 7KT PAC1500, for direct connection 80 A, double rate	7KT1 531
• 7KT PAC1500, for direct connection 80 A, double rate, calibrated version	7KT1 533
7KT PAC3000 measuring devices	
• 7KT PAC3000, for direct connection	7KT1 340
• 7KT PAC3000, for transformer connection .../5 A	7KT1 341

Technical specifications

			7KT1 391 LAN couplers
Standards			IEE 802.3 AS, IEC 60950, EN 61000-6-2, EN 61000-6-3
General data			
• Enclosures	Acc. to DIN 43880		4 modules
• Mounting	Acc. to EN 60715		Mounting onto standard mounting rail (35 mm)
• Mounting height		mm	70
Supply			
• Rated power dissipation P_v		VA	≤ 10
• Rated control supply voltage U_c		V AC	230
• Primary operating range		× U_c	0.9 ... 1.10
• Rated frequency		Hz	50
• Frequency ranges		Hz	45 ... 65
Function			
• System start			Automatic upon switching on
• LAN server identification			Over the IP address of the PC
• Transmission rate	Limitation by LAN	Mbit/s	100
• Operating system			Windows XP/Vista/7
• Operating system			IE 7, 8; Mozilla Firefox 3.09 / 3.5.3 / 3.6; Opera 9.64 / 10 / 10.5; Safari 3.2.2 /4.0.5; Google Chrome 3.0.195.27.
LAN interface			
• HW interface			Connection RJ 45
• SW interface			TCP/IP
Interface to the measuring devices			
• HW interface	RS 485 terminals	Number	3 (+/-/shielded twisted pair)
• Line	Version		STP (shielded twisted pair)
	Minimum cross-section	mm^2	2 × 0.2 or 2 x AWG 24
	Maximum line capacity	pF/m	< 50
	Impedance	W	100
	Maximum overall cable length	m	≤ 1200
	Type of installation		Serial
Measuring devices can be connected directly		Number	30

7KT1 391 LAN couplers

			7KT1 391 LAN couplers
Environmental conditions			
• Temperature	In operation	°C	-10 ... +55
	Storage and transport	°C	-25 ... +70
• Relative humidity	In operation	%	≤ 80
• Vibrations	Sinus amplitude at 50 Hz	mm	± 0.25
• Safety class	Acc. to IEC 60950		III
• Degree of protection	Installed device front side (terminals)		IP20

Dimensional drawings

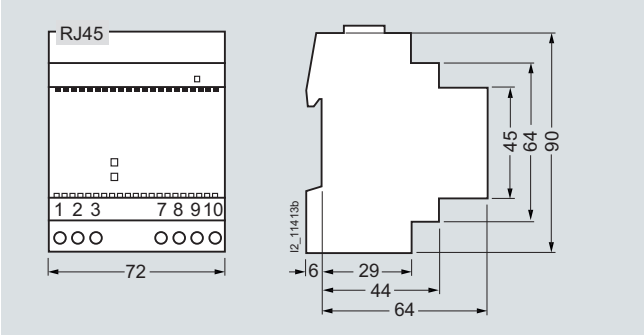

7KT1 391

Schematics

Diagram

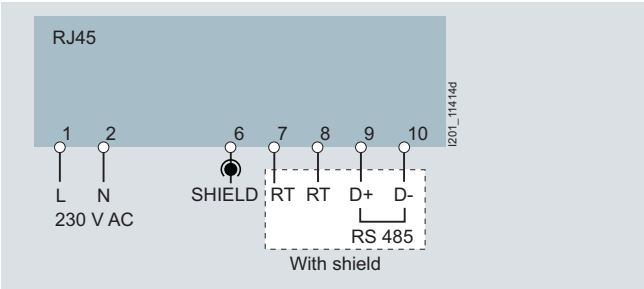

Ground potential

Both the LAN cable with the RJ45 connector and the shielded cable of the RS 485 bus system must be grounded. This also applies to the devices connected to the LAN coupler.

Connecting the devices to the LAN coupler

All the devices are connected in parallel with a shielded two-wire cable. Point-to-point installations, junctions or ring installations are not possible.

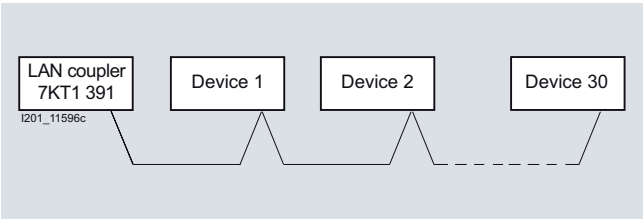

Overview

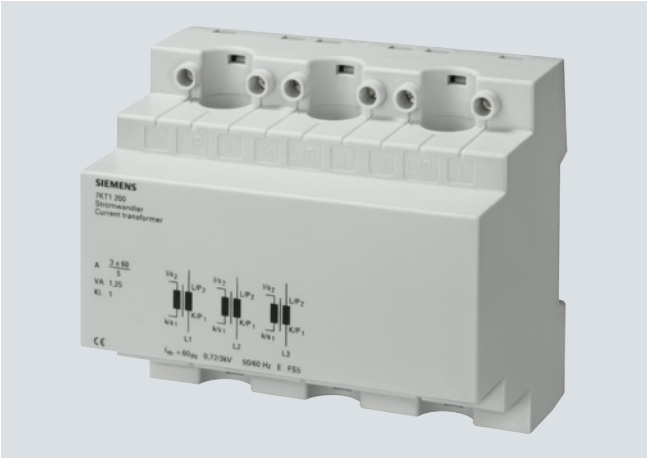

7KT1 2 current transformers

This 3-phase current 7KT1 2 transformer can be used in distribution boards according to DIN 43880. The measuring leads are routed vertically through the standard mounting rail.

This type of current transformer is suitable for supply systems or outgoing conductors in connection with the installation of a 5TE8 switch or a 5TE1 disconnector, as the primary connecting leads do not have to be interrupted.
The current transformer is designed for cables of up to 13 mm in diameter, e. g. H07V-R with 50 mm^2 conductor cross-section.

Technical specifications

			7KT1 200	7KT1 201	7KT1 202
Standards			EN 60044-1		
Secondary rated current strength		A	5		
Accuracy class		Cl.	1		
Rated power		VA	1.25	2.5	3.75
Rated frequency f_n		Hz	50/60		
Thermal current limit I_{th}	Short-time	A	60 ×I_e		
Thermal continuous current		A	1 ×I_e		
Overcurrent limit factor		FS	5		
Rated impulse withstand voltage U_{imp}		kV	> 3		
Creepage distances and clearances		mm	> 3		
Rated operational voltage U_e		V AC	720		
Rated operational current I_e		A AC	3 × 60	3 × 100	3 × 150
Terminals ±screw (Pozidriv)			PZ 1		
Conductor cross-sections - Rigid - Flexible, with end sleeve		 mm^2 mm^2	 0.5 ... 4 0.5 ... 2.5		
Permissible ambient temperature		°C	-5 ... +60		
Resistance to climate	According to EN 60068-1		20/60/4		

Dimensional drawings

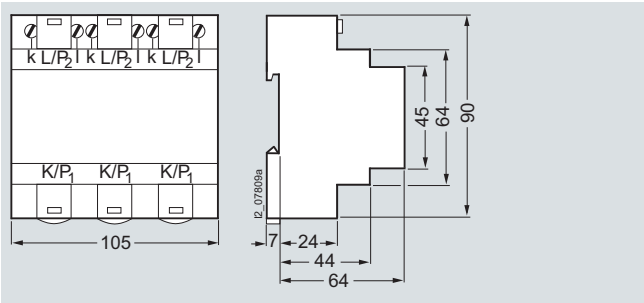

7KT1 200
7KT1 201
7KT1 202

Schematics

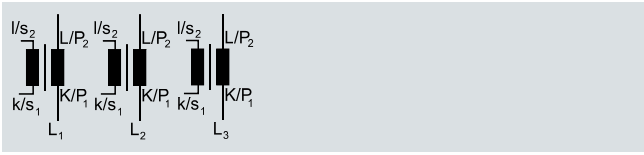

7KT1 200
7KT1 201
7KT1 202

Note:

Current transformers must not be operated with open terminals as this can result in dangerously high voltages, which may cause personal injury and/or property damage. It also exposes the transformer to thermal overload.

7KT9 0 measuring selector switches

Overview

Measuring selector switches (voltmeter selector switch)

Measuring selector switches are used as CO contacts of the phases for voltages and currents in three-phase systems for voltmeters and ammeters.

The design of these switches is adapted to match the modular installation devices. They support use in compliance with EN 60947-3.

Dimensional drawings

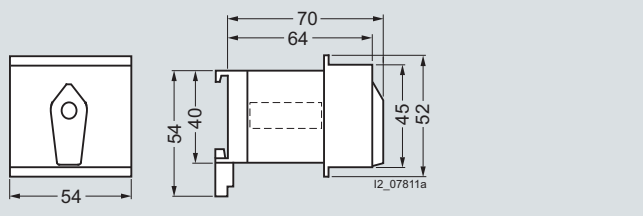

7KT9 010
7KT9 011

Schematics

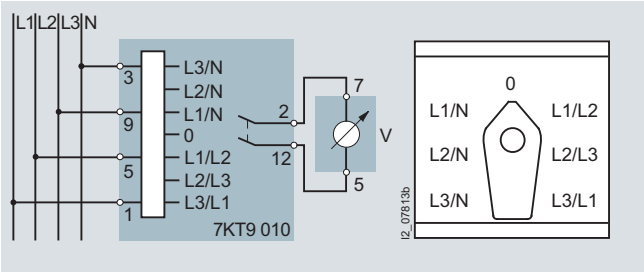

Voltmeter switching

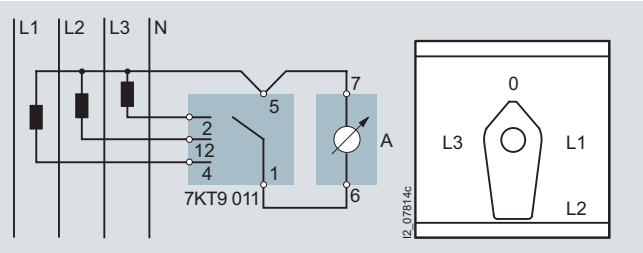

Ammeter switching

Internal interconnection of the phases in the ammeter selector switch for the prevention of glitches at the connections of the current transformers:

Switch position	Short-circuited phases		
	L1	L2	L3
0	✓	✓	✓
L1	--	✓	✓
L2	✓	--	✓
L3	✓	✓	--

Siemens AG
Infrastructure & Cities Sector
Low and Medium Voltage Division
Low Voltage Distribution
Postfach 10 09 53
93009 REGENSBURG
GERMANY

www.siemens.com/lowvoltage

Subject to change without prior notice
PDF only
MP.R3.LV.0000.00.2.92
PH 1111 50 En